Chapter 3 Facility Plan Drivers

CHAPTER OVERVIEW

Pima County Wastewater Management Department (PCWMD) recognizes that various drivers influence the direction a utility can take when planning and managing assets. Four drivers were identified as having the potential to impact the overall planning process. These include: regulatory drivers, institutional drivers, asset management, and population effects. Chapter 3 discusses each driver as it relates to the planning process. The future system improvements are evaluated against these drivers in Chapters 4 and 5.

Regulatory Drivers

Major regulatory drivers impacting PCWMD Facility Planning are Federal, State and local regulatory programs for water quality including surface water discharges, groundwater discharges and reuse activities; Federal and State regulatory programs for biosolids production and disposal; and Federal, State and local regulatory programs for air quality regulations.

The relevant programs and permits for Pima County Wastewater include the Arizona Pollution Discharge Elimination System (AZPDES) for effluent quality and biosolids, Arizona Aquifer Protection Permit Program (APP) for groundwater discharge, Arizona Reclaimed Water permits, and the Pima County Department of Environmental Quality permit for air quality. PCWMD maintains and updates, as necessary, permits associated with the wastewater treatment and collection system. Pima County meets current permit requirements.

All these regulatory program mandates, as well as specific facility permits issued under these programs, impact the future regulatory requirements of the Metropolitan Wastewater Treatment System. These potential impacts include: ammonia and total nitrogen removal requirements at the treatment plants; future regulations for discharges to effluent-dependent waters; Capacity, Management, Operations and Maintenance (CMOM) regulations for the conveyance system; and biosolids regulations. Thus, regulatory requirements will be significant drivers for new Capital Improvement Program (CIP) projects and CIP implementation schedules.

Asset Management

Pima County has an ongoing asset management program. Asset management is gaining importance in effective management of wastewater facilities as new CMOM regulations (ADEQ R18-9-C305, 2.05 General Permit) are being formulated at the Federal and State level. With the adoption of General Accounting Standards Board (GASB) 34, wastewater utilities have to follow mandatory financial standards when reporting on the financial health of an agency. Maintaining the integrity of the wastewater treatment and collection systems is an important part of improving the overall operation of the wastewater system. PCWMD maintains and preserves its wastewater assets through periodic maintenance, replacement or rehabilitation projects.

Institutional Drivers

Pima County has many institutional constraints. These constraints include:

- Statutory Authority.
- Intergovernmental Agreements (IGAs).
- Bonding and Covenants.
- Litigation and Settlements.

Pima County is unusual in that it is specifically authorized by State legislation to own and operate a sewer system. Pima County is designated as the wastewater management authority by the Pima Association of Government (PAG) and has adopted wastewater ordinances and entered into IGAs with the local jurisdictions in support of the 208 Plan mandate to provide for the regionalization of wastewater services in Pima County. Under the 1979 IGA with the City of Tucson, Pima County retains 10 percent of the effluent from its metropolitan area treatment facilities and 90 percent is owned by City of Tucson. This agreement also requires Pima County to maintain the effluent quality in accordance with Federal and State discharge standards.

PCWMD operates as an enterprise fund. This allows the Department to devote all its revenues to the operation, maintenance, and expansion of the regional wastewater system. PCWMD charges new users for connecting to the system and collects sewer fees from users. The Department has secured funding for large projects both through selling bonds and obtaining public infrastructure loans. As a result, PCWMD is required to maintain its operations in compliance with covenants to the bond purchasers and the public financing authorities.

PCWMD is also constrained by litigation settlements. Water Rights to effluent in Pima County are impacted by a settlement agreement in the case of United States v. City of Tucson, No. CV 75-039 TUC FRZ. The litigation in this case was resolved via passage and adoption of Public Law 108-451 (also known as the Southern Arizona Water Rights Settlement Act) and various implementing agreements. As the ultimate settlement of the case, the law anticipates that 28,200 acre-feet of effluent annually will be made available to the Bureau of Reclamation.

In summary, PCWMD operates within the institutional framework established by PAG, by way of the DMA designation and 208 Plans, as well as, the State enabling legislation, including the bonding authorization and IGAs with local jurisdictions.

Population Effects

The population in the Planning Area is growing at a rate of 2.2 percent per year. The 2006 Metropolitan Area Facility Plan Update (Facility Plan) uses population forecasts developed by PAG to predict growth. The population in eastern Pima County is expected to grow from 916,026 in 2005 to 1,496,045 in 2030. This equates to Metropolitan Area (Roger, Ina and Randolph treatment plants and tributary areas) wastewater collection and treatment improvements to handle a total of 85.05 million gallons per day (MGD) in 2030 based on a GIS model (The Model) developed specifically for the Facility Plan by Pima County. The Model was calibrated based on collection system and treatment plant flow monitoring. The Model will be updated by PCWMD for continuous use in analysis of improvements to the wastewater system. Based on the PCWMD planning criteria of 85 gallons per capita per day, the facilities will need to handle an additional 1 MGD Average Dry Weather Flow (ADWF) for every 11,765 new residents served by PCWMD.

The flow projections from Chapter 3 are compared to the current operating systems within PCWMD's treatment and collection system in Chapters 4 and 5. These comparisons allow Pima County to effectively manage the wastewater flow and plan collection and treatment system improvements based on capacity requirements to address planned growth.

SUB-CHAPTER 3.1 REGULATORY DRIVERS

The purpose of Sub-Chapter 3.1 is to discuss the regulatory drivers influencing PCWMD facility planning activities. Primary regulatory drivers include surface water, groundwater (or aquifer) and reclaimed water regulations. Other regulatory drivers include programs such as biosolids and air quality. For the most part, surface water protection and air quality requirements are governed by State of Arizona regulations administered by the Arizona Department of Environmental Quality (ADEQ), many which have their genesis in Federal Clean Water Act (CWA) requirements. In contrast, groundwater and reclaimed water quality requirements are governed solely by State of Arizona state-specific regulations.

Facility Compliance Status

Currently, PCWMD holds 38 permits to operate the facilities providing wastewater treatment services to Pima County residents. PCWMD is in compliance with existing Federal, State and local permit requirements, and is the recipient of numerous awards from the Association of Metropolitan Sewerage Agencies (AMSA) for its compliance history. For example:

- Roger Road WWTP –Gold Award in 1989; Silver Awards in the following years: 1987, 1990, 1991, 1992, 1995, 1998, 2000, 2001 and 2005.
- Ina Road WPCF –Silver Awards in 1990, 1991, 1994, 1996, 1999, 2001, 2003 and 2005.
- Gold Awards for the Avra, Green Valley and Marana treatment facilities in 2005.

Future Regulatory Compliance

Mandatory regulatory compliance requires a sustained program effort. Frequent changes in regulations result in changes in the discharge requirements associated with each of PCWMD's facility discharge permits. Maintaining compliance in all facilities all the time remains a constant challenge. To facilitate this effort, facility plans, such as this one, must be regularly updated so Pima County can project its capital expenditure needs in the 20-year planning horizon.

Changes in environmental regulations, associated permit renewals and facility expansion plans all contribute to an ever changing regulatory landscape for the Department. Currently renewals of the AZPDES permits for the two largest metropolitan treatment facilities, the Ina Road WPCF and Roger Road WWTP, are in process with ADEQ since their expiration in November of 2004. Specific requirements for nitrification/denitrification improvements at both facilities as well as acute and chronic Whole Effluent Toxicity (WET) testing for potential in-stream toxicity to the aquatic environment are being included in the renewed permits. These requirements will require substantial improvements to both facilities and are discussed in more detail in the last section of this chapter.

Arid West Water Quality Research Project

As already noted, surface water quality regulations are constantly evolving. However, the foundation for many of these regulations is based on national guidelines with limited applicability to arid West waters, especially effluent-dependent and ephemeral waters. Effluent-dependent waters (aquatic environments created as a result of the discharge of treated effluent to an otherwise dry or intermittent streambed) represent unique aquatic ecosystems. EPA, through the Arid West Water Quality Research Project (AWWQRP), is funding interdisciplinary research in this area. Pima County was selected to manage the AWWQRP based on its experience with these extreme arid West conditions.

Research conducted to date has noted how arid West waters contrast markedly with the relatively stable aquatic habitats characteristic of Midwestern and Eastern regions. In the arid West, aquatic communities are largely controlled by the physical conditions that tend to be harsh and extremely variable. Effluent-dependent waters, such as the Santa Cruz River in the Planning Area, represent unique stream ecosystems consisting of a highly variable ephemeral system into which effluent flow introduces significant changes in ecosystem characteristics. For example, as was demonstrated in the AWWQRP-funded Habitat Characterization Study, the physical and chemical template established by the discharge of effluent exerts important controls on the potential composition of the aquatic community. Accordingly, gaining an understanding of what is attainable in effluent-dependent waters such as the Santa Cruz River ultimately may have a significant influence on establishing appropriate surface water quality regulations in the future. A brief description of all the research activities conducted by the AWWQRP is provided in Appendix A.

Permitted County Wastewater Facilities

PCWMD currently operates twelve permitted wastewater treatment facilities. The permits required for each facility are dependent on how the facility disposes its effluent. Effluent is discharged or reused in the following ways:

- Surface Water: Requires an Arizona Pollutant Discharge Elimination System (AZPDES) permit.
- Groundwater: Requires an Aquifer Protection Permit (APP).
- Reuse: Requires a Reclaimed Water Permit (but may be issued as part of an APP).

In addition to these discharge-permitting options, each facility may also need to comply with stormwater discharge, air quality and biosolids regulations.

Of the twelve permitted PCWMD facilities, seven hold permits to discharge treated effluent to surface waters under the jurisdiction of the CWA ("jurisdictional waters"). Most of these facilities have aquifer protection permits and several have permits for reuse of treated wastewater. The remaining facilities do not discharge to jurisdictional waters, but have other applicable permits (e.g., aquifer protection or reuse) as shown in Table 3.1.

Table 3.1 Pima County Permits and Jurisdictional Waters Receiving Treated Effluent

WWTP Conveyance System	AZPDES	APP	Reclaimed Water	Storm Water / Air Quality	Jurisdictional Waters
Arivaca Junction WWTF	N/A	P-100640	R-105345		
Avra Valley WWTF	AZ0024121	P-100642	R-105498	AZMSG-6893	Black Wash
Corona De Tucson	N/A	P-100644			
Green Valley WWTF		P-100629	R-100629	AZMSG-6894	Santa Cruz River
Ina Road WPCF	AZ0020001	P-100630	R-100630	AZ0020001/1903	Santa Cruz River
Kino Ecosystem Restoration Project	AZ0025291	[1]	[1]		Santa Cruz River
Marana WWTF	AZ0020001	P-100631	R-100631		Santa Cruz River
Mt. Lemmon WWTF	AZ0022250	P-100345		[1]	Unnamed Wash
Pima County Fairgrounds	N/A	P-100634			
Randolph Park WRF	AZ0025383	P-103617	[1]		Santa Cruz River
Rillito Vista WWTF		P-100636			
Roger Road WWTP	AZ0020923	P-100655	R-105471	AZ0020923/1913	Santa Cruz River
Wastewater Conveyance System		General Permit 1.10			

[1] Other Agencies hold associated APP or Reuse permits.
[2] Other Federal permits apply.

Treatment: Regulatory Requirements

The choice of where and how to discharge treated effluent determines which permits are necessary for facility operation. Each of these permits contains treatment requirements based on the final or end use of the water. It is important to recognize the primary regulatory driver for treatment requirements is not the permit per se, but the requirements established to protect the end use of the treated effluent. For example, if the treated effluent is discharged to jurisdictional water, the treatment requirements are dependent on the uses of that waterbody. Similarly, if the treated effluent is reused, then the treatment requirements depend upon the type of reuse. Following is a brief discussion of the regulatory programs that ultimately dictate the treatment requirements established in each facility's discharge permit.

Surface Water Protection

Surface water protection requirements and activities are currently one of the primary regulatory drivers dictating treatment requirements at PCWMD facilities. Water quality standards establish the basis for effluent quality requirements. These requirements evolve as the standards are revised approximately every three years. Often these requirements become more stringent with passing time. In addition, ADEQ regularly assesses water quality in jurisdictional waters. If the State identifies a water quality impairment in a surface water receiving treated effluent, a strong likelihood exists that treatment requirements will become more stringent. The following section discusses these regulatory drivers.

Surface Water Quality Standards – The 1972 Clean Water Act (substantially amended in 1987), and previous amendments of the Water Pollution Control Act of 1948, provides the current framework for surface water quality regulation in the United States and Arizona. The objective of the CWA is "to restore and maintain the chemical, physical, and biological integrity of the Nation's water"

(Section 101(a)). CWA Section 303 requires states to establish water quality standards for all surface waters under CWA jurisdiction. ADEQ administers this duty for Arizona.

Surface water quality standards include three components - designated uses, water quality criteria and an anti-degradation policy. ADEQ has established designated uses on jurisdictional waters throughout Arizona, which must be protected when treated effluent is discharged. PCWMD facilities that are permitted to discharge to jurisdictional waters and the uses which must be protected include:

- **Avra Valley WWTF** - Black Wash; Aquatic & Wildlife (ephemeral), Partial Body Contact.
- **Green Valley WWTF** - Santa Cruz River (Tubac Bridge to Roger Road WWTP Outfall); Aquatic & Wildlife (ephemeral), Partial Body Contact, Agricultural Livestock.
- **Ina Road WPCF** - Santa Cruz River (Roger Road WWTP Outfall to Baumgartner Road); Aquatic & Wildlife (effluent-dependent water), Partial Body Contact.
- **Kino ERP** – Santa Cruz River (Tubac Bridge to Roger Road WWTP Outfall); Aquatic & Wildlife (ephemeral), Partial Body Contact, Agricultural Livestock.
- **Marana WWTF** – Santa Cruz River (Roger Road WWTP Outfall to Baumgartner Road); Aquatic & Wildlife (effluent-dependent water), Partial Body Contact.
- **Mount Lemmon WWTF** – Unnamed Wash; Aquatic & Wildlife (ephemeral), Partial Body Contact.
- **Roger Road WWTP** - Santa Cruz River (Roger Road WWTP Outfall to Baumgartner Road); Aquatic & Wildlife (effluent-dependent water), Partial Body Contact.

Water quality criteria are established to protect the designated uses and include both narrative and numeric criteria. The narrative criteria generally require all waters, regardless of the designated uses, be “free from pollutants in amounts or combinations” that could have various adverse effects, such as being “toxic to humans, animals, plants, or other organisms.” The numeric criteria provide protection for each of the designated uses; the numeric thresholds vary depending on the type of receptor (e.g., humans, fish or wildlife).

The anti-degradation policy defines how the State implements water quality criteria to protect designated uses, for example through the establishment of a discharge permit. The policy, which is actually a regulation, separates waters into three tiers: Tier 1 applies to all surface water to provide a minimum level of protection; Tier 2 applies to waters where the water quality exceeds the applicable water quality standards; and Tier 3 are waters designated as “unique” or outstanding national resource waters and no degradation of water quality is allowed.

ADEQ published final draft anti-degradation implementation procedures in November 2004. These procedures define how the anti-degradation policy is implemented in practice. Under this draft all jurisdictional waters to which PCWMD discharges are classified as Tier 1 waters. Accordingly, as long as the effluent discharged to these waters meets the applicable water quality standards, does not cause a violation of the standards, and meets applicable Best Available Technology requirements, the discharge may be permitted.

Water Quality Assessment

The CWA requires states to assess water quality data every two years to evaluate water quality standards attainment in jurisdictional waters. If adequate data from a waterbody shows the applicable standards are not attained, then the waterbody is found to be impaired and placed on the state 303(d) List or “Impaired Waters List.” Waters which have insufficient water quality data to place them on the impaired waters list, but have sufficient data to indicate a potential water

quality concern, are placed on the State's Planning List. Planning List waters become the priority for additional monitoring.

Total Maximum Daily Loads (TMDLs) typically are developed for impaired waters. Through the TMDL development process, regulators evaluate the cause of water quality standards non-attainment. The resulting TMDL establishes a plan to achieve water quality standards in the listed water – typically through activities intended to reduce pollutant loads. If a wastewater facility discharges to the impaired water, a common outcome of the TMDL process is more stringent effluent limitations, which require upgrades to treatment facilities.

ADEQ published its most recent Impaired Waters and Planning Lists in 2004. These lists will be updated in 2006. Currently, none of the waters receiving effluent discharge from PCWMD facilities are listed as impaired. However, three segments are on ADEQ's Planning List and will be subject to increased monitoring. These segments are:

- **Santa Cruz River, Roger Road WWTP to Rillito Wash** – This segment was assessed as "inconclusive" based on a lack of data to sufficiently assess attainment of the uses. Data were lacking for Escherichia coli, pH and dissolved metals (copper, cadmium, and zinc).
- **Santa Cruz River, Canada del Oro to Hydrologic Unit Code (HUC) Boundary 15050303** – This segment was assessed as "attaining some uses" and placed on the State's 2004 Planning List because of concerns regarding total residual chlorine concentrations. The specific data that resulted in this finding are published in ADEQ's 2004 Integrated 305(b) Assessment and 303(d) Listing Report. Two sample results were available for assessment. Of these two samples, one data result (480 µg/L) exceeded the aquatic life and wildlife acute and chronic criteria for total residual chlorine (11 µg/L and 5 µg/L, respectively).
- **Santa Cruz River, HUC Boundary 15050303 to Baumgartner Road** - This segment was assessed as "inconclusive" based on a lack of data to sufficiently assess attainment of the uses. Data were lacking for Escherichia coli, pH and dissolved metals (copper, cadmium, and zinc).

Aquifer Protection Regulations

State regulations require the operation of a wastewater treatment facility cannot cause an excedence of a groundwater quality standard. These standards are generally equivalent to the Federal maximum contaminant levels (MCLs) established to protect drinking water supplies. Compared to the surface water quality standards, the MCLs are relatively static, and only rarely change. Accordingly, more certainty exists regarding regulatory expectations for the protection of groundwater.

Reclaimed Water Regulations

An alternative to direct surface water discharge of treated effluent is to reclaim the water for reuse. Wastewater effluent that is treated and directly land applied for beneficial use, termed "direct reuse," must meet specific requirements for reclaimed water. ADEQ has established three primary classes of reclaimed water: A, B and C. Classification is based on treatment technologies that yield a particular effluent quality. For two of these classes, A and B, additional "+" classes (A+ and B+) have been established to recognize treatment technologies that result in reclaimed water nitrogen concentrations of < 10 mg/L. A decision on the treatment technology that should be applied to effluent to produce a particular quality of reclaimed water is dependent on the end use.

Other Applicable Regulatory Programs

There are other regulatory programs which affect treatment requirements either within the treatment facility or associated with the wastewater conveyance system. These programs include, but may not be limited to, wastewater pretreatment, biosolids handling, stormwater management and air quality. Although the cumulative regulatory requirements of these programs are significant from a

management standpoint, none of these programs are currently important regulatory drivers with regards to treatment facility expectations for the quality of the discharged effluent.

Facility Operation: Permit Requirements

PCWMD facility discharges are subject to three major permit programs: Arizona Pollution Discharge Elimination System (AZPDES), APP and Reclaimed Water. The applicability of these permit programs depends on the point of discharge. While these permit programs have technology-based requirements affecting the design and operation of wastewater facilities, it is the water quality-based permit requirements with the greatest impact on facility planning. Primarily, the regulatory programs, as previously noted, drive these requirements. Of these programs, it is the surface water protection requirements that ultimately have the greatest impact on permit requirements. Following is a brief description of the permit requirements associated with the operation of PCWMD facilities.

Arizona Pollutant Discharge Elimination System (AZPDES) Permits

Discharges to jurisdictional waters require an AZPDES permit. These permits require compliance with “technology-based” limits for certain constituents (e.g., biochemical oxygen demand and total suspended solids, and, where necessary, “water quality-based limits”). Water quality-based limits are required where it is determined the effluent discharge has a reasonable potential to cause an excedence of a receiving water quality standard. Because effluent-dependent waters are created by the effluent discharge, applicable water quality-based effluent limits are typically equivalent to the water quality criteria.

AZPDES permits also require WET testing to implement the narrative toxics criterion. Through the use of indicator test species, WET tests are intended to assess the cumulative or synergistic toxic effects associated with the effluent discharge. The most commonly used WET test species include: a fish (Pimephales promelas, fathead minnow); water flea (Ceriodaphnia dubia or Daphnia magna); and a green algae species (Selenastrum capricornutum). WET testing may assess both short-term, acute effects (mortality endpoint) and long-term, chronic effects (growth and reproduction endpoints).

AZPDES permits are generally valid for a 5-year period, but may be amended at any time if the circumstances that formed the basis of the original permit application change (i.e., as a result of the establishment of a more stringent water quality standard).

Aquifer Protection Permits

Aquifer Protection Permits are required for any discharge of wastewater either directly or indirectly to groundwater. Permits are issued either as individual or general permits. PCWMD facilities generally require individual permits, which include specific treatment performance requirements for new and existing facilities, as well as, a broad requirement to apply “best available demonstrated control technology” (BADCT).

Permit requirements for new facilities differ from requirements for existing facilities. If an existing facility is expanded or facility operations are changed, such as increased design flow, significant increase in pollutant discharge, or re-designation of point of compliance, the new facility permitting requirements are applied to the modified facility.

Reclaimed Water Permit

Currently, all PCWMD Reclaimed Water Permits are general permits. Effluent discharges permitted under the AZPDES or APP programs that are subsequently reused (i.e., withdrawn from an aquifer or receiving water at some point downstream of the discharge) are not considered direct reuse and do not require a separate Reclaimed Water Permit.

Three general permit categories are recognized. Type 1 applies to the use of gray water; Type 2 permits cover individual facilities; and Type 3 permits cover various situations including reclaimed water blending facilities, reclaimed water agents and specific gray water situations where the Type 1 general permit does not apply. Most PCWMD facilities, producing water for reuse, will be covered under the Type 2 General Permit. Permit requirements depend upon the quality of the effluent and the intended type of reuse.

Other Permit or Compliance Requirements

As noted, operation of wastewater facilities requires compliance with a number of other programs. Some of these programs require permits, but others are self-implementing and only require compliance with reporting requirements. Primary examples include:

- **Biosolids –** The biosolids program is self-implementing and imposes requirements on the generators of biosolids as well as the entities that further treat, distribute, or use the biosolids. In Arizona both the EPA and ADEQ have regulatory requirements for biosolids handling; however, ADEQ has received from EPA the complete jurisdiction of the biosolids program. Currently, compliance includes the submission of an annual report to both ADEQ and EPA. Biosolids program requirements are discussed in detail in Chapter 7.
- **Air Quality –** Permit requirements depend on how the discharging facility is classified (i.e., as a major or minor source). Currently, the Ina Road WPCF is classified as a Class I, major source, but the Roger Road WWTP is permitted as a Class II, synthetic minor source. In addition, the PCWMD also has two permits for portable engine generators. Appendix B contains additional information regarding air quality program requirements.
- **Stormwater Management –** Wastewater facilities are required to comply with Stormwater Quality Regulations. This program is currently administered under the Federal Multi-Sector General Permit (MSGP), but ADEQ is currently developing its own MSGP general permit. The MSGP is self-implementing through the filing of a Notice of Intent and establishment of a stormwater management plan for each facility. The major treatment facilities, Roger Road WWTP and Ina Road WPCF, have their stormwater requirements contained in their individual AZPES permits.

Facility Planning: Future Regulatory Drivers

The focus of this chapter has been on regulatory drivers – the regulatory requirements that drive facility treatment and operations requirements. The protection of jurisdictional waters (i.e., waters subject to CWA requirements) has been, and will continue to be, the most significant regulatory driver for PCWMD facilities. AWWQRP research is helping create a better understanding regarding alternatives to implement CWA requirements in arid West waters. However, the pace of regulatory change in surface water protection requirements, many of which are driven by the EPA, remains fast. These evolving requirements, as well as the regulatory changes anticipated in other regulatory programs expected to influence facility planning in the near term, are described below.

Regulatory Change

Surface Water Regulations

The regulations applicable to the protection of surface waters are never static and can be somewhat unpredictable. However, participation in ADEQ's water quality standards program (through participation in the Triennial Review process) and the impaired waters program (through participation in rulemaking activities and preparation of the biannual Impaired Waters List) will allow PCWMD to monitor likelihood of regulatory change. Following is a discussion of current key issues associated with each program with the potential to impact PCWMD facilities.

Triennial Review - Changes to the surface water quality standards occur about once every three years during the triennial review of water quality standards (CWA requirement). Changes to the standards, which affect water quality-based effluent limits, ultimately get translated into permit requirements; however, permit changes typically occur during a permit renewal rather than immediately after a change occurs in the standards. ADEQ is currently conducting its triennial review and expects to establish revised water quality standards in 2006. Anticipated revisions with the potential to impact PCWMD permits include:

- **Ammonia Water Quality Criteria** – Currently, no ammonia criteria are applicable to effluent-dependent waters. However, in the current triennial review, ADEQ is proposing to adopt both acute and chronic ammonia criteria. These criteria would likely be similar to the existing criteria applied to warm waters: acute - 10 to 20 mg/L ammonia -N, for pH in the range of 7.5 to 8.0; chronic - 2 to 3 mg/L ammonia N at pH of 7.5 to 8.0 and a temperature of 20 degrees C. Establishment of these criteria will require some PCWMD facilities to be upgraded to include nitrification/denitrification.
- **Adoption of Anti-degradation Implementation Procedures** - ADEQ's November 2004 final draft procedures establish effluent-dependent and ephemeral waters as Tier 1 waters. This designation greatly simplifies the application of anti-degradation requirements to PCWMD facilities. No baseline water quality analysis will be required to demonstrate the issuance of an AZDPES permit could result in the degradation of water quality. Instead, as is currently the case, the permit only must address compliance with water quality standards. PCWMD will need to track the finalization of the anti-degradation procedures to verify this approach is approved.
- **Adoption of Nutrient Criteria for Nitrogen and Phosphorus** – ADEQ is currently developing nitrogen and phosphorus criteria for lakes and has indicated it may eventually establish nutrient criteria for other waters including effluent-dependent waters. The Ina Road WPCF AZPDES permit currently includes a total nitrogen limit of 8 mg/L as part of a pilot study investigation. The aquifer protection permits for Ina Road WPCF and Roger Road WWTP include limits of 10 mg/L nitrate -N, with alert levels of 8 mg/L nitrate -N, but adoption of nutrient criteria could reduce allowable nitrogen levels below 8 mg/L nitrate -N. It is also not clear whether the ADEQ will establish phosphorus criteria, because it is currently believed that nitrogen is the limiting nutrient. Although no effort is underway in the current triennial review to establish nutrient criteria on waters to which PCWMD facilities discharge, PCWMD will need to monitor this issue closely in subsequent triennial reviews.
- **Narrative "Bottom Deposits" Criterion** - ADEQ is developing implementation procedures to address the narrative standard prohibiting pollutants that "settle to form bottom deposits that inhibit or prohibit the habitation, growth, or propagation of aquatic life." It is unknown what these procedures will contain or how they will be implemented in a practical sense. However, it is likely that the procedures will focus on controlling sediment inputs to surface waters and will rely on the use of a reference condition to identify where sediment load concerns exist. Until it is known how ADEQ intends to identify and measure concerns regarding bottom deposits, it is unclear how these procedures may impact Pima County. It is possible a new sediment criteria could result in more restrictive limits for total suspended solids discharged to surface water from PCWMD's wastewater treatment facilities, although the current focus of ADEQ's efforts is controlling sediment loads from stormwater discharges.
- **Narrative Biological Integrity Standard** – In the current triennial review, ADEQ plans to adopt a new narrative criterion to address the biological integrity in surface waters designated as warm water or cold water. The implementation procedures will rely on the use of reference conditions established separately for warm and cold water wadeable streams. At this time,

ADEQ does not plan to apply the proposed narrative biological standard to effluent-dependent or ephemeral waters. However, it is possible ADEQ could expand the applicability of this narrative in the future, but to do so will require establishing an appropriate reference condition for the biological communities in these waters. Currently, ADEQ is not developing these reference conditions.

- **Water Quality Assessment and Preparation of Impaired Waters List** – The methods by which ADEQ assesses jurisdictional waters and prepares the Impaired Waters List are dictated by State regulations and subject to EPA oversight. Placement of a waterbody on the Impaired Waters List can have significant impact on the operation of a wastewater facility. Accordingly, the preparation of this list and activities intended to modify the regulations that determine how this list is developed must be carefully monitored. ADEQ has proposed changes to the Impaired Waters regulations. If adopted as currently proposed in June 2006, the changes will significantly alter the listing methodology. The proposed changes also eliminate the Planning List, which serves as a notice to affected watersheds that the area is under enhanced scrutiny. The concept of a Planning List is a recommendation of the National Research Council to provide a means of ascertaining which waters are truly impaired. Removal of the Planning List could result in many more waters being listed as impaired and requiring a TMDL. Currently, three segments of the Santa Cruz River, to which PCWMD facilities discharge, are on the Planning List. These waters were placed on this list because insufficient data were available to make an impairment finding. If the regulatory changes result in these waters being placed instead on the Impaired Waters List, the potential impact to PCWMD facilities is significant.

Aquifer Protection Permit Regulations

Capacity, Management, Operations and Maintenance Permits - ADEQ has established a new general permit for CMOM (R18-9-C305, 2.05 General Permit) in the APP program. This program allows for a sequenced improvement of the conveyance system over a 10-year period. Compliance actions for sewage overflows under the CMOM program weigh the scope and progress of the maintenance program and conveyance system improvements. Accordingly, this new permit will allow for a planned improvement to the conveyance system in exchange for ADEQ consideration in accommodating small sewage overflows which do not pose a hazard to human health or the environment.

PCWMD's best option is to plan to participate in the CMOM program. Elements of this permit program will require expenditure of funds include:

- 10-year timeframe for the participant to fully maintain system capacity.
- Addressing management of upstream sewage systems - even those not under County jurisdiction, which may require establishment of agreements with tribal nations.
- Comprehensive maintenance plan with mandatory maintenance requirements.
- Mandatory scheduled cleaning cycles.
- Handling of emergencies without altering the cleaning cycle.
- Reporting requirements for sewage system releases.
- Capacity sizing criteria.

Odor Control – ADEQ has also modified the APP regulations to include a section on odor control major modifications of existing and new wastewater facilities. This rule states "The owner or operator of a sewage treatment facility shall not operate the facility so that it emits an offensive odor on a persistent basis beyond the setback distances specified in subsection (I)." At this time there does not appear to be measurable criterion specified for the enforcement of this rule. Older facilities,

such as the Roger Road WWTP, some force mains and some lift stations may be periodically out of compliance with the new rule regardless of PCWMD's on-going efforts to correct odor problems.

Potential Permit Changes

Issues related to AZPDES Permitting

The AZPDES permits for PCWMD's two major treatment facilities, Ina Road WPCF and Roger Road WWTP, have been modified in the renewal process to include new and/or more restrictive limits for various constituents. Currently, the renewed Ina Road WPCF copper limit is an acute value of 30 µg/L. The proposed Roger Road WWTP permit copper limit is 25 µg/L. Each of these permits contains a copper limit variance in order to give the Department time to investigate if a site specific copper limit is appropriate, given the nature of the discharged effluent and the receiving water characteristics. Pending the results of site specific studies, an interim limit of approximately 30 µg/L will be applied together with a 5-year compliance schedule. Ammonia and nitrogen removal from effluent discharge in the large and older wastewater plants has been an ongoing discussion of EPA and ADEQ for many years. Depending on the temperature and pH of the effluent, and the resulting exposure, ammonia can be harmful to aquatic species. Nitrates, in an aquatic setting, can promote alga growth and in an anaerobic setting, also convert to ammonia. However, for the last 20 years, the Ina Road WPCF and Roger Road WWTP facilities have been effectively "grandfathered in" due to their age into permit conditions appropriate to their level of technology. It should be noted, in response to the ongoing discussions with EPA and ADEQ, PCWMD has included nitrification/denitrification (NdeN) processes in the construction of its new 12.5 MGD treatment train at the Ina Road WPCF and obtained voter authorization for a 2004 Bond Project to install NdeN processes for the remaining 25 MGD treatment train at the Ina Road WPCF. In addition, all the larger outlying facilities, Green Valley WWTF, Avra Valley WWTF and Marana WWTF have NdeN processes. The same discussions regarding NdeN improvements are in a preliminary stage at the Roger Road WWTP.

In addition to the NdeN improvements, ADEQ has moved permit requirements from the Acute Standards generally used in past EPA issued NPDES permits to Chronic Standards, now regularly used in AZPDES permits. Acute Standards are generally regarded as those standards protecting short-term exposure to aquatic habitat. Chronic Standards are generally regarded as those standards protecting chronic, or long-term exposure to aquatic habitat. In addition to WET testing, chlorine removal is now required on all wastewater discharges to Waters of the U.S. due to the negative effects of chlorine to aquatic life. It should be noted, as ADEQ places more stringent limits on AZPDES permit requirements for PCWMD wastewater facilities, the pretreatment program (Industrial Wastewater Control or IWC) must reassess levels of pollutants which can be discharged into the conveyance system. If more stringent requirements are needed, local industries will have to upgrade pretreatment, at a potentially significant cost to those users. The IWC group itself must also expand in order to inspect and sample more frequently to provide the necessary stringent quality control on the discharge to the wastewater treatment plants.

Conclusions

Based on the regulatory drivers discussed in this sub-chapter, PCWMD should consider the following actions:

- Set as a goal the production of B+ or higher reuse water at all facilities by the end of the planning period.
- Address odor control at all wastewater facilities.
- Install Biological Nutrient Removal at both the Ina Road WPCF and the Roger Road WWTP during this planning period.

- ✓ The BNR for 25 MGD at Ina is included as Phase I and II from 2005-2014.
- ✓ The BNR for Roger Road WWTP will be phased in by 2015.

- Implement CMOM program for conveyance facilities and enhanced asset management for all facilities.
- Develop strategies for emerging environmental issues of significance, such as endocrine disrupters.
- Maintain strong relationships with EPA, the Federal Water Quality Coalition, ADEQ and others to have a proactive role in reviewing and configuring regulations and initiatives to reflect arid West conditions.
- Continue to support the work of the AWWQRP to assist regional water and wastewater agencies in applying national water quality regulations to the special conditions of the arid West.
- Develop a Class A biosolids process.

SUB-CHAPTER 3.2 INSTITUTIONAL FRAMEWORK

The following sub-chapter identifies the institutional and legal framework within which PCWMD operates, ranging from the Clean Water Act to Intergovernmental Agreements.

Clean Water Act

The objective of the Clean Water Act [33 U.S.C. § 1251 et. seq.] is to restore and maintain the chemical, physical and biological integrity of the Nation's waters. Pursuant to this objective, Congress declared it is the national policy that area-wide wastewater treatment management planning processes be developed and implemented to assure adequate control of sources of pollutants in each State.

Regional Water Quality Planning - the 208 Plan Process

To implement the Clean Water Act, the Governor of Arizona designated the Pima Association of Governments (PAG) as the regional water quality-planning agency for all of Pima County (excluding tribal lands) in 1975. As a result, PAG is responsible for administering the area wide wastewater treatment planning objectives outlined in the Clean Water Act [Section 208] in Pima County. Through PAG, local, State and tribal governments coordinate transportation, environmental quality and population growth planning efforts.

As PAG explains its role in this process,

> 208 Planning refers to Area-wide Water Quality Management Planning, which is required under Section 208 of the Clean Water Act. The development and implementation of the 208 Area wide Water Quality Management Plan, which includes all of Pima County except tribal lands, ensures that a regional approach is taken to water quality planning. The 208 Plan thus provides unified policy and management direction for control and utilization of wastewater in Pima County. The current 208 Plan consists of a document published in 1978 and all of the subsequent amendments to that document.
>
> Through the 208 Planning process, all local jurisdictions, (including Pima County, the cities of Tucson and South Tucson, and the Towns of Marana, Oro Valley, and Sahuarita), the business community, various industries, environmental groups, public interest groups, and the general public have an opportunity to participate in regional planning for water quality protection. Planning for the treatment of municipal wastewater is a key part of 208 planning. The 208 Plan identifies all of the existing wastewater treatment facilities in Pima County, as well as any facilities that have been proposed as part of approved plans.
>
> The 208 Plan emphasizes the regionalization of wastewater treatment, and discourages the proliferation of small, privately owned treatment facilities. Concerns about potential impacts to water quality, and long-term reliability of small plants also lend support to the concept of regionalization of wastewater treatment.
>
> It is 208 Plan policy to treat all wastewater in regional facilities, except for remote areas or areas where it can be clearly demonstrated that a small plant is environmentally and economically preferable to regional treatment from the point of view of the public good.

Regional Water Quality Management - The Designated Management Agency

PCWMD was designated as the wastewater management agency for most of eastern Pima County. PAG works closely with PCWMD and ADEQ to ensure implementation of the 208 Plan in Pima County.

The fact that PCWMD has been designated as the wastewater management agency authority under the Area Wide 208 Plan is due in part to the 1979 Merger of the City of Tucson and Pima County wastewater systems. In the State of Arizona, towns, municipalities and improvement districts generally perform wastewater treatment management. Pima County's authority to construct and operate a regional sewage system is derived from A.R.S. § 11-264, subsection (4):

> *Any county with a population between five hundred thousand and one million persons according to the most recent United States decennial census may purchase, construct or operate a sewage system, including the collection, transportation, pumping, treatment and disposal of sewage, and charge fees and levy taxes therefore, provided the county secures the assent by resolution of the governing bodies of those incorporated cities and towns representing not less than one-half of the population of the county prior to purchase, construction or operation of a sewage system, provided that once an initial assent is given no further assent is necessary to operate or improve the system.*

The legislature also conferred on Pima County the authority to issue revenue bonds for sewer projects. Pima County has implemented the regional sewer system by entering into intergovernmental agreements (IGAs) with the local jurisdictions, including the Cities of Tucson and South Tucson, and the Towns of Sahuarita, Marana, and Oro Valley. The essential terms of these agreements are the local jurisdictions' consent to Pima County's operation of regional sewer facilities, their grants to Pima County of access to their rights-of-way for the purposes of operating the regional system, and their consent to require service and design to Pima County requirements and standards. Pima County has also maintained working relationships and agreements for sewer service with the Tohono O'odham and Pasqua Yaqui governing bodies and is actively engaged in planning activities with these entities.

Pima County's intergovernmental agreement with the City of Tucson imposes additional requirements. These requirements arose out of the City of Tucson's transfer of its sewer system to Pima County to form a large percentage of the regional system. The obligations under the agreement with the City of Tucson, and the supplemental agreements that have followed, include the following terms:

1979 IGA

The IGA states all effluent from the Metropolitan Area treatment plants will remain under the unilateral control of the City except that Pima County is entitled to 10 percent of the effluent for use only on County parks, golf courses and recreational facilities and also for the Cortaro Marana Irrigation District. The Metropolitan Area is defined as an area that is or may be served by the Roger Road WWTP, Ina Road WPCF or Randolph Park WRF facilities, or by any collection and treatment facilities constructed which are physically integrated into the metropolitan sewerage system. The 1979 IGA further provides that Pima County maintain effluent quality at the Metropolitan Area treatment plants in accordance with Federal and/or State standards for discharge into waters of the United States. The City cannot require treatment in excess of NPDES permit standards and agrees to provide any additional treatment in excess of these standards in order to meet reuse plans.

2000 Supplemental IGA

The City of Tucson and Pima County entered into the Supplemental IGA, agreeing that effluent is an important long-term renewable source of water in the Tucson Active Management Area and the costs of treating it to Reclaimed Water standards should be borne by the users. The Supplemental IGA provides that up to 10,000 acre feet of effluent per year should be reserved for use in riparian projects with additional amounts to be made available if agreed to by both parties. The details of the use of this effluent in a conservation effluent pool agreement are currently being negotiated

with the City. Provisions have been included in the IGA to allow other water providers reasonable access to effluent so long as they pay all associated costs. (See Chapter 6 for details.)

The Supplemental IGA also provided that the City of Tucson waive its right to unilateral control over the use and disposition of effluent discharged from PCWMD's treatment plants in Non-metropolitan Areas, provided that if any of the effluent is put to a use, other than public use, that treatment and distribution costs are not passed on to City or County taxpayers within the City of Tucson. Pima County agrees to charge a fee per acre foot which is not less than the City's actual average per acre operating cost of production/treatment of reclaimed water during the previous fiscal year.

Additionally, through the Supplemental IGA, the City of Tucson and Pima County have agreed to restore the Randolph Park Treatment Plant (now the Randolph Park WRF) to operating use.

Implementation of the Regional Sewer System

As noted previously, Pima County, as the designated wastewater management authority, has adopted wastewater ordinances and entered into IGAs with the other local jurisdictions in support of the 208 Plan mandates to provide for the regionalization of wastewater services. Pima County is pursuing formal IGAs with the Tohono O'odham and Pasqua Yaqui nations for the sewer service being provided to these entities. Pima County has also entered into an agreement with Pinal County to provide sewer service to one development located just across the Pima County line, which is topographically tributary to Pima County's sewer system. PCWMD is a party to numerous master sewer service agreements and individual sewer service agreements, which the Department uses to plan, allocate and track capacity demand on conveyance and treatment facilities.

PCWMD operates as an enterprise fund. This allows the Department to devote all its revenues to the operation, maintenance, and expansion of the regional sewer system through a segregation of its funds from the general funds of Pima County and from other Pima County departments. The Department is accordingly in a position to establish the proper amounts that users should be charged for using the system and that new users should be charged for connecting to the system. The Department has used this financial independence to secure funding for large projects both through selling bonds and obtaining public infrastructure loans. As a result, PCWMD is required to maintain its operations in compliance with covenants to the bond purchasers and the public financing authorities.

Litigation Constraints

PCWMD is also constrained by the following litigation and settlements:

United States v. City of Tucson, No. CV 75-039 TUC FRZ. As the ultimate settlement of the case, the law anticipates that 28,200 acre-feet of effluent annually will be made available to the Bureau of Reclamation for purposes of resolving the litigation. (Also known as the Southern Arizona Water Rights Settlement Act.) The litigation in this case is being resolved via passage and adoption of Public Law 108-451 and various implementing agreements.

Financial Constraints

PCWMD establishes and maintains the sewer user fee and user charge system within the requirements of the Clean Water Act, under the auspices of the Arizona Department of Environmental Quality, which has been given primacy by the United States. The Department is also subject to the requirements of Resolution 1991-138, which sets out the bond covenants for the issuance of sewer revenue bonds.

Planning Constraints - Concurrency

To address the issues of infrastructure development in the rapid-growth areas of eastern Pima County, the Pima County developed and implemented a policy of concurrency – that is, that actual development cannot occur until available public infrastructure has the capacity to accommodate service demands caused by the new development. To accomplish this, PCWMD conducts concurrency reviews according to the Pima County policy. However, implementing the concept of concurrency has a very different impact on PCWMD than other Pima County departments. First, PCWMD has always required developers to install, at their expense, the entire sewer conveyance system for the development, as well as any off-site public sewer necessary to connect to the regional public sewer conveyance and treatment system. Second, PCWMD increases capacity at the major Metropolitan Treatment Facilities in major expansions of multiple millions of gallons per day, not just the capacity needed by individual developments. However, at the significantly smaller outlying treatment facilities, special problems are created by the speed and size of development impacting the available capacity of the existing base facility. Another constraint is that, as a regional entity that serves multiple jurisdictions as well as unincorporated Pima County, concurrency does not address all decisions related to the need for or provision of capacity and service. For these reasons, PCWMD is performing concurrency reviews on a case-by-case basis, especially in regard to the smaller outlying facilities, and working closely with Pima County Development Services and individual developers to accomplish the goals of the concurrency policy.

PCWMD has incorporated these policies into its operational and planning activities, including design and construction of interceptors and treatment facilities.

Environmental Constraints

In addition to the Clean Water Act, PCWMD operates under and must remain in compliance with numerous Federal and State mandates, including the National Environmental Policy Act (NEPA), the Federal Endangered Species Act (ESA), the Migratory Bird Treaty Act (MBTA), the Arizona Native Plant Law, the City of Tucson Native Plant Ordinance, the Town of Marana Native Plant Permit, the Town of Oro Valley Environmentally Sensitive Land Ordinance, and the Pima County Native Plant Protection Ordinance (NPPO).

Conclusion and Recommendations

PCWMD operates within the institutional framework established by PAG, by way of the DMA designation and 208 Plans, as well as, the State enabling legislation, including the bonding authorization, and the IGAs with local jurisdictions. Based on the discussion in this chapter, it is recommended PCWMD:

- Collaborate with City of Tucson in implementing the Long Range Water Plan in areas of mutual interest.
- Hold periodic IGA and sewer service review meetings with all the municipalities in PCWMD's service area, similar to the ongoing monthly meetings with the City of Tucson.
- Upgrade the working relationships with the Pasqua Yaqui Tribe and the Tohono O'odham Nation to the Intergovernmental Agreement level.
- Continue to work with other Pima County Departments and local jurisdictions on concurrency, Sonoran Desert Conservation Plan goals, and the beneficial reuse of effluent.

SUB-CHAPTER 3.3 ASSET MANAGEMENT

Sub-chapter 3.3 discusses the concept of asset management as applied to public water and wastewater agencies such as PCWMD. The concept of asset management is familiar to anyone owning or responsible for property, including homes, cars and boats as well as office buildings, apartments and factories. The asset must be maintained and preserved through scheduled periodic maintenance, replacement of failing or aging components and rebuilding/remodeling as needed for the asset to continue to serve its purpose. For public utilities like PCWMD, this responsibility is reinforced by both "best practices" standards in the wastewater industry and the fiduciary obligations to the holders of revenue bonds who require the system to function effectively in order to provide repayment for their investments.

Over the last several years, however, almost every water and wastewater industry conference, seminar and newsletter has highlighted asset management due to several significant recent developments. These include mandatory financial standards for government operations issued by the Government Accounting Standards Board (i.e. the GASB-34 standard) and proposed Federal and State regulations prohibiting Sanitary Sewer Overflows (SSOs) and requiring Capacity, Management, Operations and Maintenance (CMOM) programs. In addition, State and Federal Regulators have been issuing Consent Orders to public utilities mandating hundreds of millions of dollars of repair and rehabilitation construction as well as Enforcement Orders with multi-million dollar fines - all revolving around the alleged failure of the public utility to perform effective asset management. This sub-chapter will briefly review the concept of asset management, discuss each of these recent developments, note the present plans and activities of PCWMD in regards to these issues and make recommendations for asset management planning and implementation going forward.

General Accounting Office Comprehensive Asset Management Report

There are a number of policy papers and professional articles discussing the rationale for asset management but among the most significant is the General Accounting Office (GAO) Comprehensive Asset Management Report published in June 1999. The GAO Report details how Comprehensive Asset Management will help ensure the integrity of the Nation's infrastructure through a concerted effort to improve the management of key assets along with significant investment in maintaining, rehabilitating and replacing these assets. A summary of the document follows.

According to recent Federal government (EPA) studies:

1. Water and wastewater utilities need to invest billions of dollars towards their capital infrastructure over the next two decades.
2. If utilities maintain their current spending levels, financing the necessary investments is problematic.
3. Forty-one percent of wastewater utilities do not generate enough revenue from user rates and other local sources to fully cover their cost of providing service.
4. Fully one-third of the utilities:
   - ✓ Deferred maintenance because of insufficient funding.
   - ✓ Had 20 percent or more of their pipelines nearing the end of their useful life.
   - ✓ Lacked basic plans for managing their capital assets.
5. Each year, the Federal government makes available billions of dollars to assist local communities finance wastewater infrastructure projects (WIFA). Congress is considering a number of infrastructure related proposals, including requirements for local utilities to have Comprehensive Asset Management as a means of protecting the Federal government's investment.

The GAO Report goes on to note that asset management involves: collecting detailed information on assets, analyzing the information to set priorities, performing risk/criticality analyses, integrating data and decision making and linking strategy for addressing infrastructure needs to budgets and capital improvement plans.

PCWMD has already determined that asset management is a vital tool in operating the regional wastewater system. Work on asset management goals and objectives is in place or being accomplished and will be discussed later in this sub-chapter. It should be noted, there are many methods to accomplish these asset management goals and objectives - ranging from the elaborate processes adopted by Australia and New Zealand governments to the use of standard accounting/ asset inventory systems and engineering condition assessments. However, it is also important to highlight the financial, physical and regulatory requirements mentioned previously in order to communicate the total context of this issue for PCWMD.

Financial Requirements: GASB-34

GASB-34, adopted in June 1999, creates a financial reporting requirement for governments to document that the assets under their control, frequently purchased or constructed with tax free general obligation or revenue bonds, are accounted for, valued appropriately, and replaced as necessary for their functional purpose to be achieved. A certification, in annual audits and financial reports, is required to demonstrate that funding is available and utilized for the rehabilitation and replacement of components of these assets as appropriate. Pima County and PCWMD are implementing the Synergen system to accomplish the requirements of GASB-34.

Physical Requirements: Capacity, Management, Operations and Maintenance Programs for Conveyance Systems

The EPA and many State regulatory agencies have been, for the past decade, drafting and soliciting comments on new requirements to be added to wastewater agency federal and state discharge permits to improve the “capacity, management, operation, and maintenance” of municipal sanitary sewer collection systems and to improve public notification of SSOs. The rationale for the proposed rules is to reduce health and environmental risks caused by exposure to raw sewage, improve the performance of treatment facilities, and protect the Nation’s collection system infrastructure by enhancing and maintaining system capacity, reduce equipment and operational failures, and extend the life of sewage treatment equipment.

These rules would require governments which operate municipal wastewater collection systems to develop procedures to improve system capacity, perform long-term planning for investments in infrastructure, develop better documentation and asset management procedures and then share all of this information with stakeholders. It is important to note the Federal and State discharge permits, from the origin of the Clean Water Act in 1972 to date, have been chiefly concerned with the discharge of wastewater from treatment facilities and are very strict about the quality of the discharge and inappropriate spills or discharges of insufficiently treated wastewater. The SSO regulatory initiatives would extend this policy and related rules to all parts of the collection system and regulate backups from manholes to roads and alleys under the same provisions as spills and discharges from treatment plants into waters of the United States. These proposals place a very different regulatory context on a previously non-regulatory event – overflows from manholes. Instead of a simple operational response to clear the blockage and mop up the spill, an overflow becomes a regulatory event that must be reported, investigated and may be sanctioned with monetary or criminal penalties. The CMOM program concept was developed in response to the proposed SSO rules. The program would primarily help an agency eliminate or significantly minimize potential SSOs so the agency would run the collection system in the same very controlled

manner as the treatment facilities. In addition, an agency could use the CMOM program as an affirmative defense against sanctions should there be an overflow event. The fact that the agency had an aggressive maintenance program (i.e. CMOM program) would hopefully be considered when the agency was reporting or being investigated for conveyance spills or SSOs so the sanctions potentially would not be as severe as those for an agency which had no program.

Regulatory Requirements: Permits, Rulemaking, Enforcement Orders, Consent Orders

While the EPA has been moving at a very deliberate speed in advancing the SSO regulations nationally – and may never actually accomplish making the SSO concept part of the national Clean Water Act regulatory structure - many states have moved far more aggressively to incorporate these concepts into their individual regulatory structures. States, which have been delegated primacy under the Clean Water Act, have great flexibility in how they interpret the mandates of the CWA. SSO requirements for wastewater system maintenance and capital replacement can be, and have been, incorporated into discharge permits for treatment facilities, operational and capacity requirements for conveyance lines, enforcement orders for permit violations and consent orders. In the Southwest, both the cities of Phoenix and San Diego have recently been the recipients of enforcement orders requiring the governing bodies to make significant expenditures of funds for system maintenance, repair and rehabilitation. And, as noted earlier in this Chapter, ADEQ has establihed a new general permit for CMOM (R18-9-C305, 2.05 General Permit) in the APP Program.

Implications for PCWMD

PCWMD has initiated the following activities in regards to asset management to respond to GASB–34, the potential CMOM regulations from the State and Federal (R18-9-C305, 2.05 General Permit) regulatory agencies and the “best practices” standards for wastewater utilities:

- PCWMD has adopted a geographic grid system for conveyance maintenance ensuring that, while daily work orders are fulfilled for specific problems, a systematic routine of grid-by-grid inspections and cleaning means all areas of the system receive proactive maintenance.
- A comprehensive GPS survey of the conveyance system was undertaken to locate all 60,000 manholes and clean-outs as well as the invert elevation and condition of the manholes.
- Closed circuit television inspection (CCTV) coverage of 230 miles of the interceptor system equal to or greater than 15 inches in diameter was completed and a condition assessment on this data performed. The condition assessment helped to reveal both maintenance and capital rehabilitation issues.
- As part of this Facility Plan, a condition assessment of the Roger Road WWTP and Ina Road WPCF was conducted.
- Also as part of this Facility Plan, a conveyance capacity/population model (Facility Plan Model) was prepared and calibrated that relates existing interceptor capacity to projected population and flows. (See Chapter 4 for the results of this analysis).
- PCWMD has prepared a draft CMOM plan for system operation and maintenance addressing in detail the requirements of the program.
- PCWMD is implementing the Synergen system of asset identification and valuation and will be among the first Pima County Departments to come into compliance with the standards of GASB-34.
- The net effect of the enhanced area maintenance program from 2000 to date has been to reduce the number of SSOs by 50 percent.

- PCWMD staff has been, and will continue to be, very active in permitting, rulemaking and regulatory processes, both at the State, regional and national levels.

Conclusions and Recommendations

There is no "one-stop" resolution for these comprehensive asset management issues. Asset management can be and is being accomplished by PCWMD in a number of ways. A solid foundation has been laid through the work order based maintenance program; introducing reliability centered maintenance concepts can further enhance the effort. As PCWMD goes forward, the existing aggressive maintenance program needs to be augmented by the conveyance and treatment condition assessments, the implementation of the Synergen accounting/asset inventory program, and the implementation of the draft CMOM program. The existing Capital Improvement Program information and projections need to be augmented by the capital replacement/rehabilitation needs documented through the condition assessments, and this Facility Plan. Both the operating and capital budgets and internal financial planning of PCWMD need to target system maintenance, condition assessment identification and capital rehabilitation.

Based on the discussions in this chapter, the Department should:

- Continue to engage in a vigorous proactive program of maintenance and inspection for its conveyance systems. This would include the SCADA and CCTV/condition assessment programs for the entire 3,300 miles of sewer on an ongoing basis.
- Initiate an intensive capital rehabilitation program to rehabilitate conveyance lines with significant issues.
- Utilize the Synergen system and the GASB-34 certification to establish a budget benchmark for the amount of capital rehabilitation needed per year for both conveyance and treatment.
- Develop an internal system of condition assessment to determine which assets need replacement each year and incorporate those projects in the five year CIP.
- Expand the condition assessment program developed for conveyance to the treatment facilities.

Traffic Analysis Zones

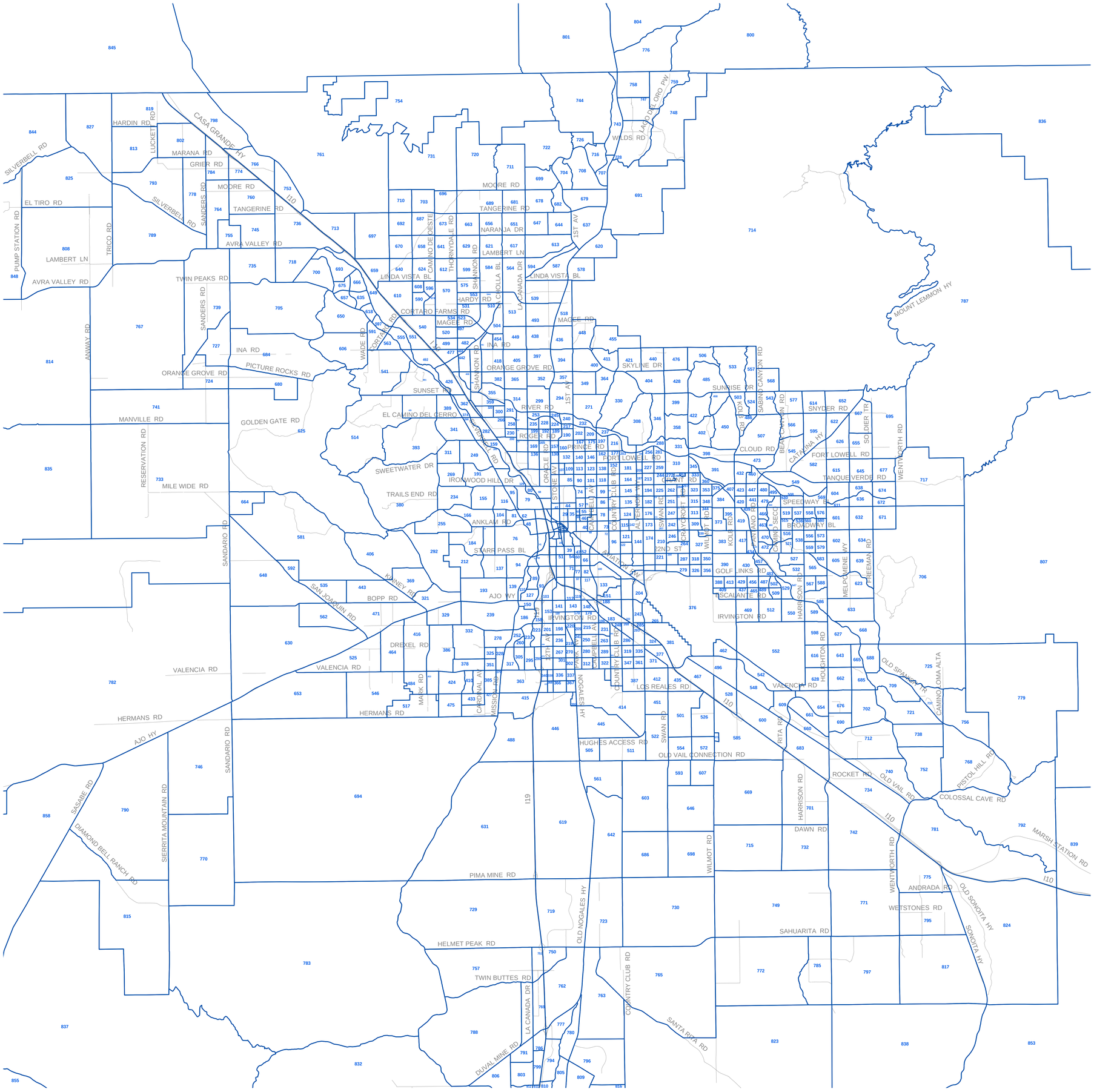

TAZ Zones

Major Streets

Figure 3.4.1

Pima County Index Map

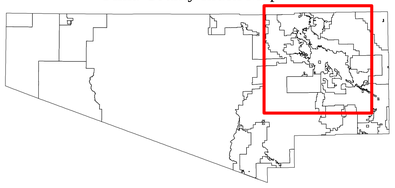

Index Map Scale 1:1,500,000

The information depicted on this display is the result of digital analyses performed on a variety of databases provided and maintained by several governmental agencies. The accuracy of the information presented is limited to the collective accuracy of these databases on the date of the analysis. The Pima County Department of Transportation Technical Services Division makes no claims regarding the accuracy of the information depicted herein.

This product is subject to the Department of Transportation Technical Services Division's Use Restriction Agreement.

N

Scale 1:90,000

Pima County Department of Transportation

TECHNICAL SERVICES

Pima County Technical Services
201 North Stone Avenue - 9th Floor
Tucson, Arizona 85701-1207
(520)740-6670 - FAX:(520)798-3429
http://www.dot.co.pima.az.us

THE SEAL OF PIMA COUNTY · ARIZONA

pygmyowl4/projects/wwm7/mxds/taz_zones.mxd mp

11/22/2005

Sewer Basins

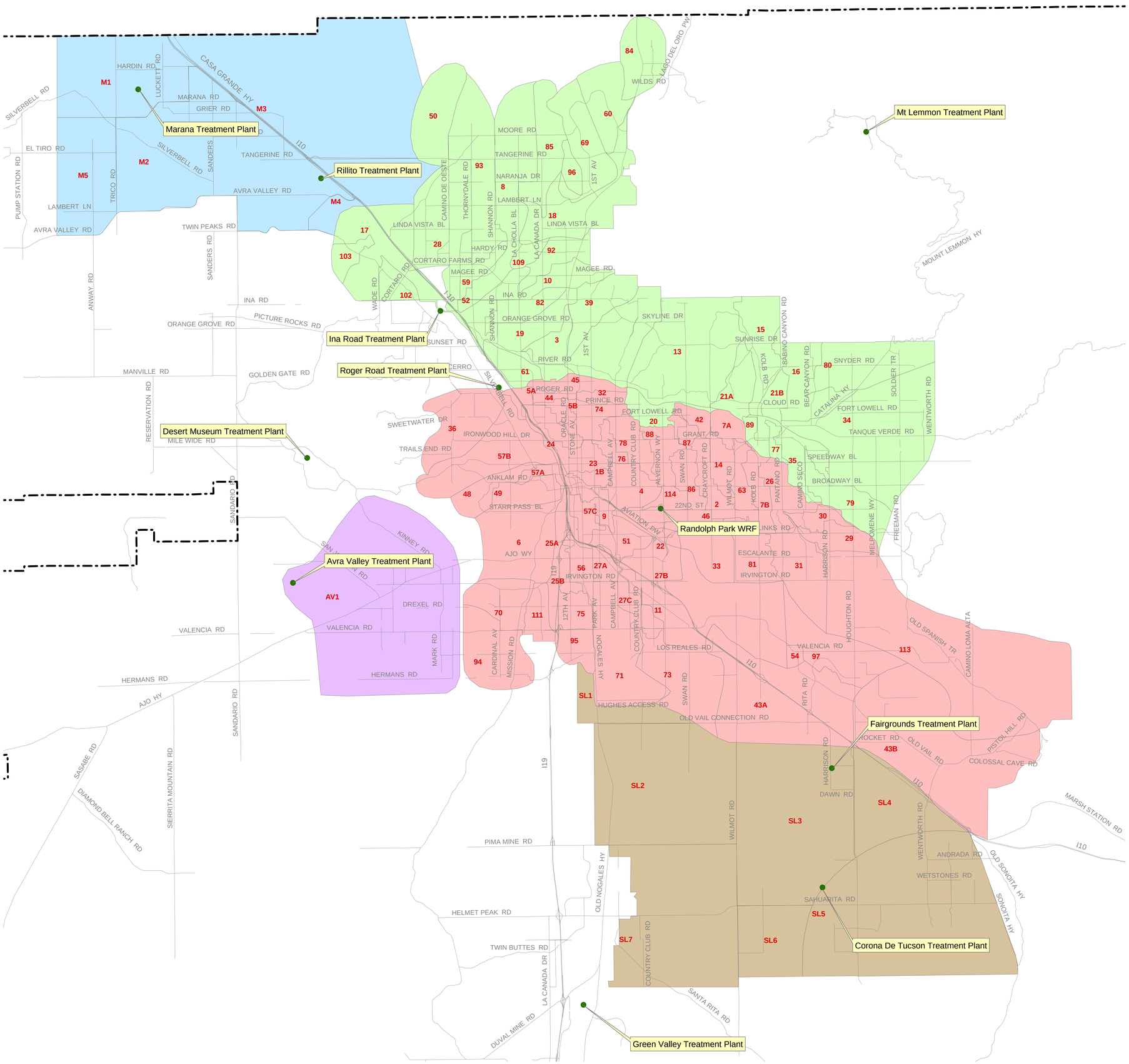

Treatment Plants

BASINS

- Avra Valley
- Ina Road
- Marana
- Roger Road
- South Lands
- Major Streets

Figure 3.4.2

Pima County Index Map

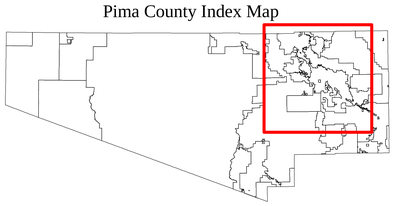

Index Map Scale 1:1,500,000

The information depicted on this display is the result of digital analyses performed on a variety of databases provided and maintained by several governmental agencies. The accuracy of the information presented is limited to the collective accuracy of these databases on the date of the analysis. The Pima County Department of Transportation Technical Services Division makes no claims regarding the accuracy of the information depicted herein.

This product is subject to the Department of Transportation Technical Services Division's Use Restriction Agreement.

N

Scale 1:90,000

Pima County Department of Transportation

TECHNICAL SERVICES

Pima County Technical Services
201 North Stone Avenue - 9th Floor
Tucson, Arizona 85701-1207
(520)740-6670 - FAX:(520)798-3429
http://www.dot.co.pima.az.us

THE SEAL OF PIMA COUNTY ARIZONA

pygmyowl4/projects/wwm7/mxds/sewer_basins.mxd mp 2/8/2005

Figure 3.4.3

Roger Road
Relationship of
Basins to Interceptors

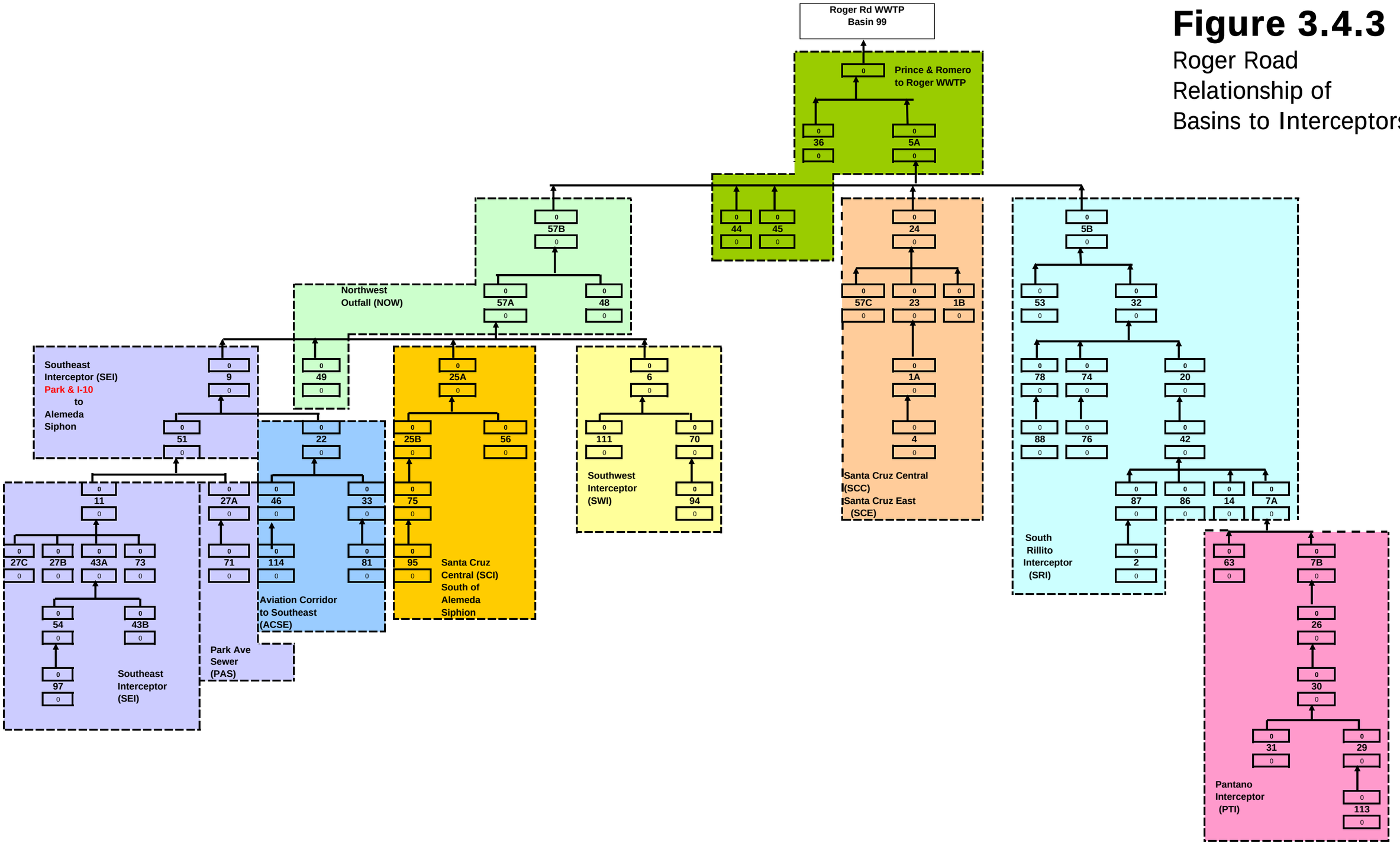

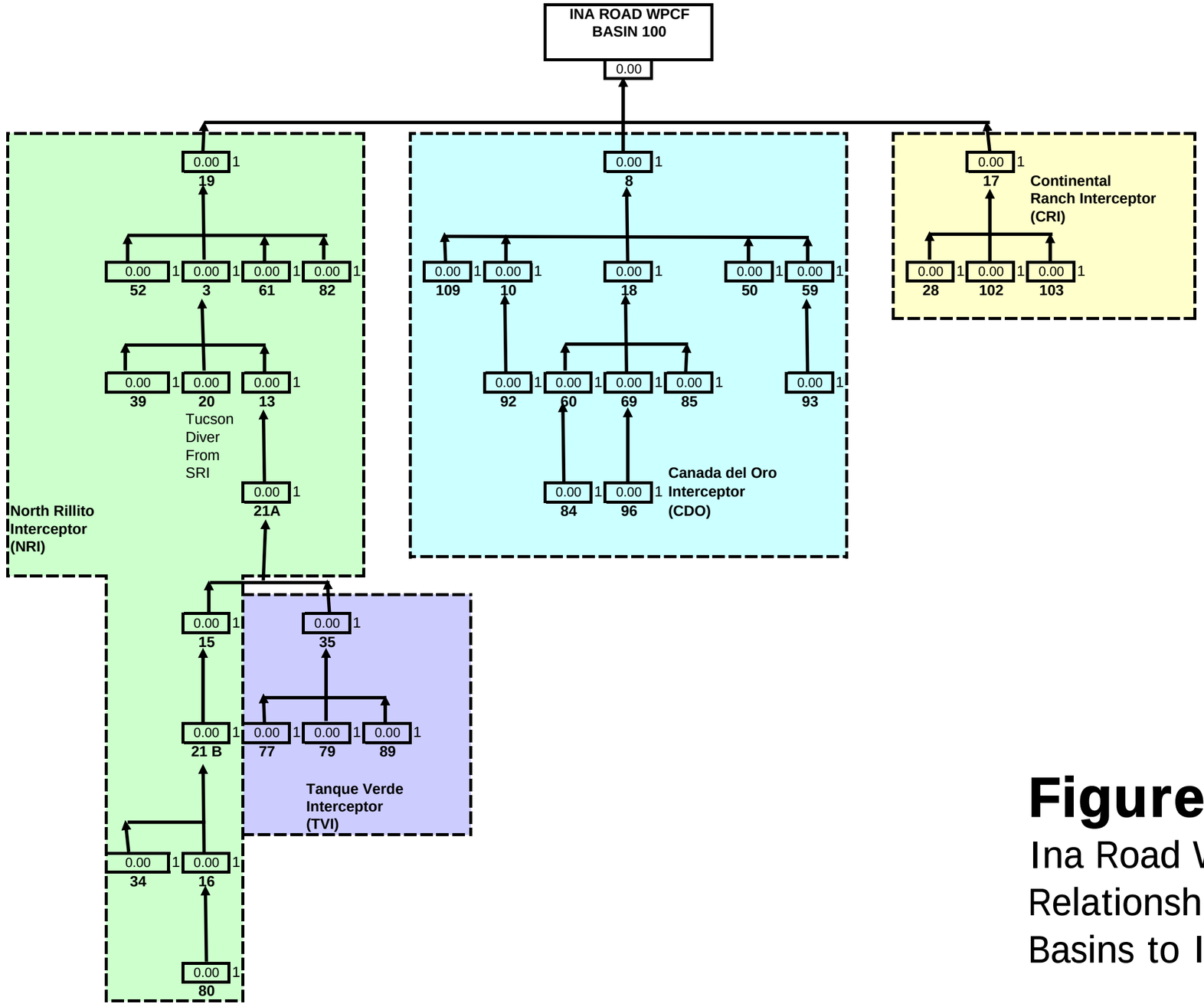

Figure 3.4.4

Ina Road WPCF
Relationship of
Basins to Interceptors

Figure 3.4.5

Population Chart

Roger Road Tributary System

2005

Basin No.	Population on sewer 2005	Upstream Population on sewer	Peak Factor
1A	5,066	16,507	***1.77***
1B	3,258	3,258	***2.07***
2	15,232	15,232	***1.78***
4	11,442	11,442	***1.83***
5A	561	495,433	***1.40***
5B	3,003	194,976	***1.49***
6	18,755	43,171	***1.64***
7A	4,618	75,453	***1.58***
7B	11,219	63,996	***1.60***
9	9,645	130,436	***1.52***
11	12,628	44,712	***1.64***
14	9,153	9,153	***1.86***
20	12,559	131,743	***1.52***
22	755	47,608	***1.63***
23	16,152	32,660	***1.68***
24	11,148	49,405	***1.63***
25A	916	40,607	***1.65***
25B	6,319	29,441	***1.69***
26	17,182	52,777	***1.62***
27A	4,475	20,323	***1.74***
27B	526	526	***2.62***
27C	5,167	5,167	***1.97***
29	7,447	15,991	***1.78***
30	5,532	35,595	***1.67***
31	14,072	14,072	***1.80***
32	6,707	189,334	***1.49***
33	10,461	29,651	***1.69***
36	1,606	1,606	***2.24***
42	2,596	119,184	***1.53***
43A	11,011	4,747	***1.99***
43B	4,747	23,831	***1.72***
44	3,945	3,945	***2.03***
45	10,981	10,981	***1.83***
46	12,436	17,203	***1.76***
48	2,160	2,160	***2.17***
49	5,840	5,840	***1.95***
51	8,148	73,183	***1.58***
53	2,639	2,639	***2.12***
54	133	8,073	***1.89***
56	10,251	10,251	***1.85***
57A	4,004	224,060	***1.47***
57B	9,345	235,564	***1.47***
57C	2,338	2,338	***2.15***
63	6,839	6,839	***1.92***
70	7,768	15,841	***1.78***
71	15,848	15,848	***1.78***
73	2,559	2,559	***2.13***
74	14,423	19,631	***1.75***
75	13,829	23,122	***1.72***
76	5,208	5,208	***1.97***
78	14,940	31,253	***1.68***
81	19,190	19,190	***1.75***
86	13,526	13,526	***1.80***
87	3,224	18,455	***1.75***
88	16,313	16,313	***1.77***
94	8,072	8,072	***1.89***
95	9,293	9,293	***1.86***
97	7,941	7,941	***1.89***
99	0	497,039	***1.40***
111	8,576	8,576	***1.88***
113	8,544	8,544	***1.88***
114	4,767	4,767	***1.99***

Tucson Diversion Peaking Factor ***1.17***

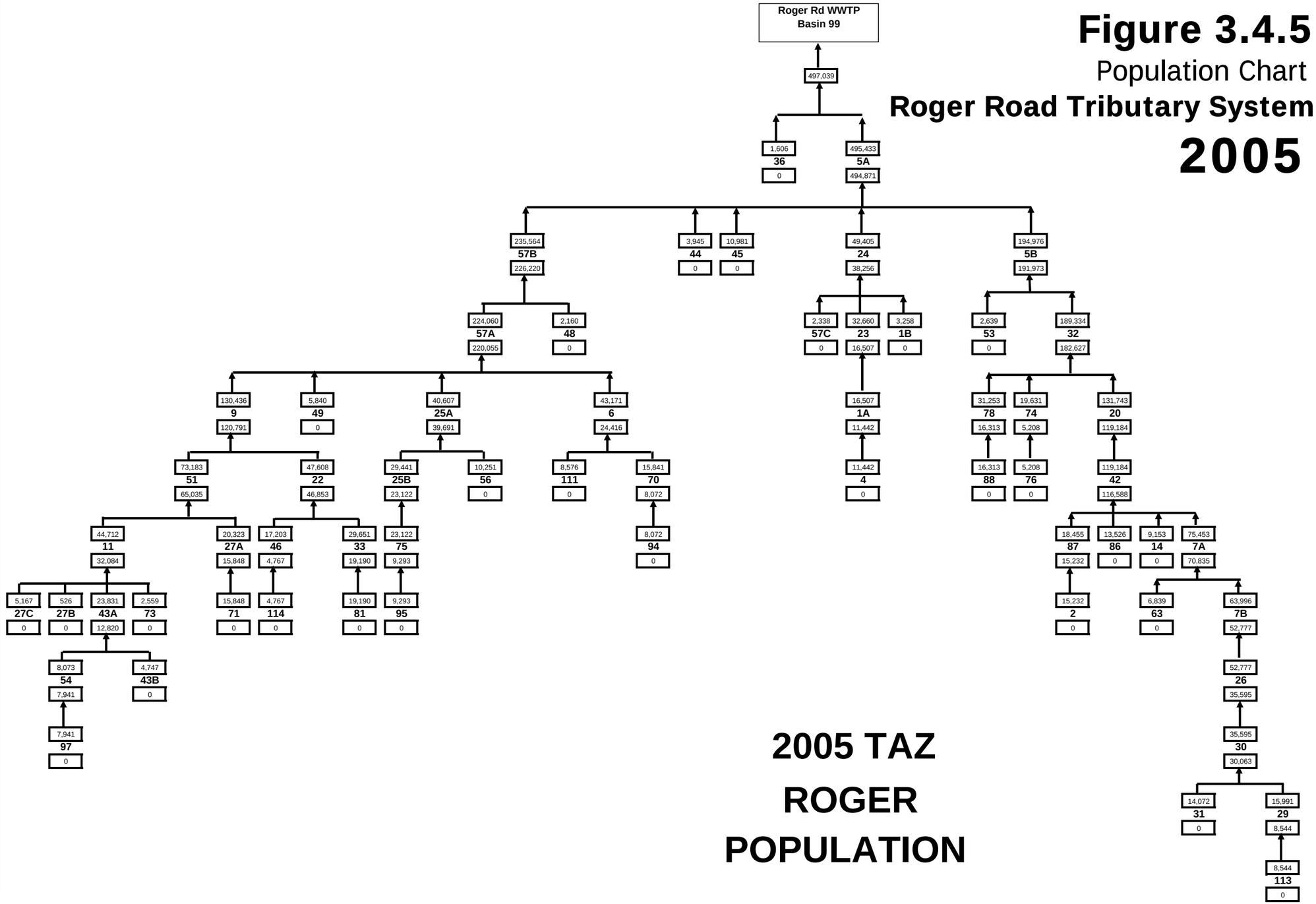

2005 TAZ ROGER POPULATION

Figure 3.4.6

Average Dry Weather Flow (ADWF)

Roger Road Tributary System

2005

Basin No.	Basin Population 2005	Gal per Day per person	Basin Flow ADWF	% of Population on Septic	InterCeptor ADWF mgd	METERS Dec 2004 Readings ADWF	METERS Dec 2004 Readings Number
1A	5,066	85	0.43	0.0%	2.75	2.26	23
1B	3,258	85	0.28	0.0%	0.28		
2	15,232	85	1.29	0.0%	1.29	1.28	2
4	11,442	85	0.97	0.0%	2.07	1.28	27
5A	561	85	0.05	0.0%	20.84	20.93	24
5B	3,003	85	0.26	0.0%	11.22		
6	20,839	85	1.59	10.0%	3.67	2.12	6
7A	4,618	85	0.39	0.0%	6.41	7.08	7
7B	11,219	85	0.95	0.0%	5.44		
9	9,645	85	0.82	0.0%	11.50	11.76	31
11	14,031	85	1.07	10.0%	4.18	3.87	10
14	9,153	85	0.78	0.0%	0.78		
20	12,559	85	1.07	0.0%	11.20	11.52	40
22	755	85	0.06	0.0%	4.38	4.01	34
23	16,152	85	1.37	0.0%	4.12		
24	11,148	85	0.95	0.0%	7.90	10.80	28
25A	916	85	0.08	0.0%	2.91		
25B	6,319	85	0.54	0.0%	1.97	3.20	25
26	17,182	85	1.46	0.0%	4.49		
27A	4,475	85	0.38	0.0%	2.53	5.60	16
27B	526	85	0.04	0.0%	0.04		
27C	5,167	85	0.44	0.0%	0.44		
29	7,447	85	0.63	0.0%	1.36	0.70	26
30	5,532	85	0.47	0.0%	3.03	3.64	29
31	14,072	85	1.20	0.0%	1.20		
32	6,707	85	0.57	0.0%	10.74		
33	10,461	85	0.89	0.0%	2.85		
36	3,213	85	0.14	50.0%	0.14		
42	2,596	85	0.22	0.0%	10.13		
43A	12,235	85	0.94	10.0%	2.41	3.99	37
43B	9,494	85	0.40	50.0%	0.40		
44	3,945	85	0.34	0.0%	0.34		
45	10,981	85	0.93	0.0%	1.33	1.59	47
46	12,436	85	1.06	0.0%	1.46		
48	2,160	85	0.18	0.0%	0.18		
49	5,840	85	0.50	0.0%	0.50		
51	8,148	85	0.69	0.0%	7.40	9.70	12
53	2,639	85	0.22	0.0%	0.22		
54	133	85	0.01	0.0%	0.69		
56	10,251	85	0.87	0.0%	0.87		
57A	4,004	85	0.34	0.0%	16.97		
57B	11,681	85	0.79	20.0%	17.95	18.46	4
57C	2,338	85	0.20	0.0%	0.20		
63	6,839	85	0.58	0.0%	0.58		
70	8,631	85	0.66	10.0%	1.35		
71	15,848	85	1.35	0.0%	2.15	2.43	30
73	2,694	85	0.22	5.0%	0.22		
74	14,423	85	1.23	0.0%	1.67		
75	13,829	85	1.18	0.0%	1.97		
76	5,208	85	0.44	0.0%	0.44		
78	14,940	85	1.27	0.0%	2.66		
81	19,190	85	1.63	0.0%	1.63		
86	13,526	85	1.15	0.0%	1.15		
87	3,224	85	0.27	0.0%	1.57		
88	16,313	85	1.39	0.0%	1.39		
94	13,454	85	0.69	40.0%	0.69		
95	9,293	85	0.79	0.0%	0.79		
97	8,359	85	0.67	5.0%	0.67		
99	0	85	0.00	0.0%	38.92		
111	9,027	85	0.73	5.0%	0.73	0.11	11
113	11,392	85	0.73	25.0%	0.73		
114	4,767	85	0.41	0.0%	0.41		
20A	Tucson Blvd diversion to Basin 3		5.35		5.35	5.35	20
	Sliim Fast discharge to Basin43A		0.00				
	Prison Dsischarge from S. Wimot		0.38				
	Extra Flow from the U of A			0.25			
	Extra Flow from Downtown to Basin 1B			0.40			
	Extra flow from Airport & Industrial Zones			0.80			
	Extra flow from Davis Monthan & Industrial Area			0.33			
	Randolph Park WRF			0.00			
	% Diversion from Basin 9 to Basin 24			17.0%			
	% Diversion from Basin 22 to Basin 4			25%			
	Tucson Mall flow to Basin 45			0.40			

1 Randolph Park WRF at the end of 2005 at 0.0 mgd to calibrate model. Online in Jan 2006.

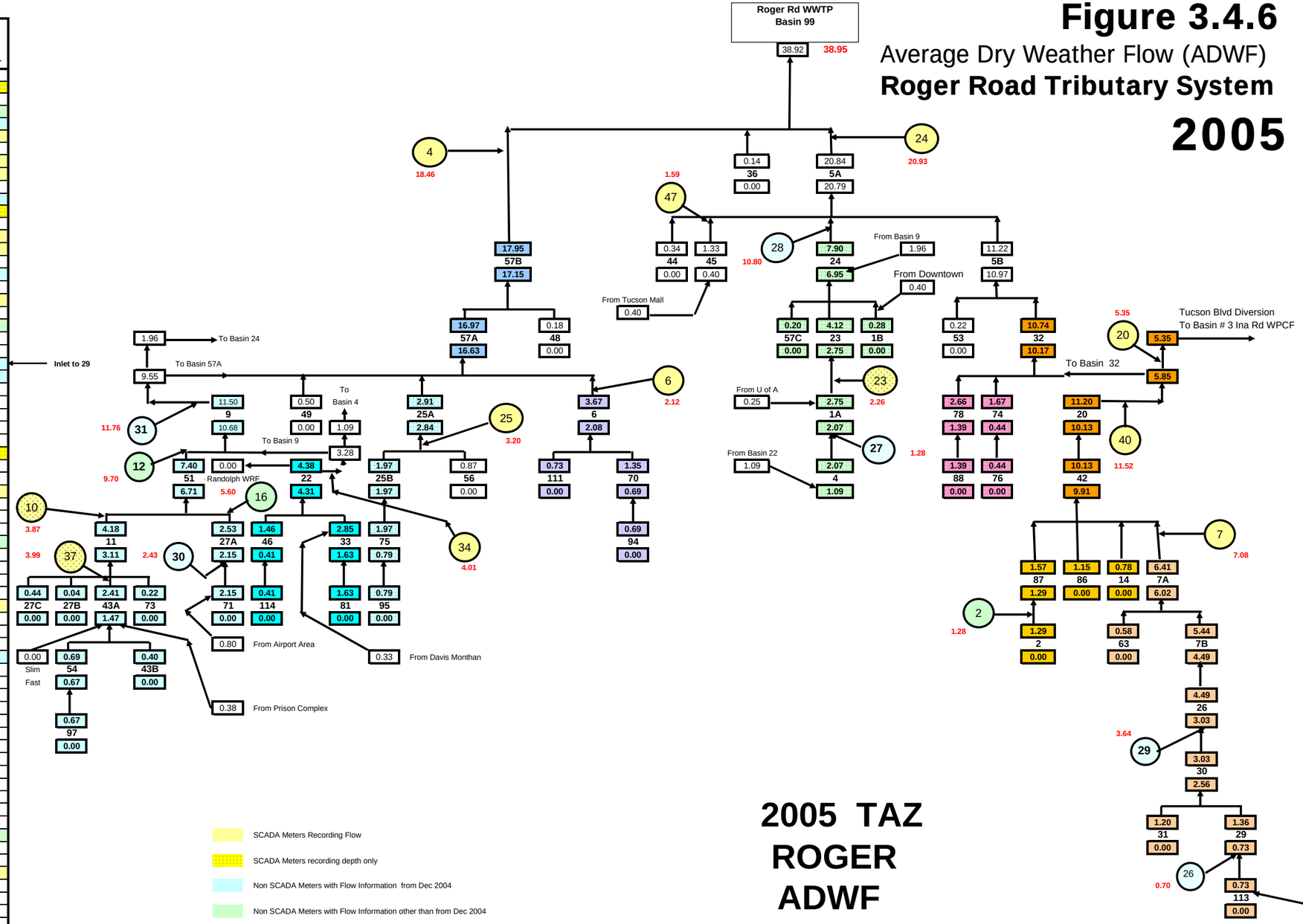

2005 TAZ ROGER ADWF

Figure 3.4.7

Peak Dry Weather Flow (PDWF)

Roger Road Tributary System

2005

Basin No.		Basin Population 2005	Interceptor Flow ADWF	Basin Flow ADWF	Peak Factor	PDWF mgd	CAPACITY 85% Full Pipe Capacity ENTER	CAPACITY 85% Full Pipe Capacity EXIT	METERS PDWF	METERS Mtr No	Over Exit Capacity Indicator	Over Enter Capacity Indicator	
1A		5,066	2.75	0.43	1.77	**4.86**	5.93	10.11	**3.63**	**23**	5.24	1.07	##
1B		3,258	0.28	0.28	2.07	**0.57**	1.70	9.40			8.83	1.13	##
2		15,232	1.29	1.29	1.78	**2.31**	2.98	3.66	**2.26**	**2**	1.35	0.67	##
4		11,442	2.07	0.97	1.83	**3.78**	2.37	6.67	**2.05**	**27**	2.89	(1.41)	##
5A		561	20.84	0.05	1.40	**29.27**	50.80	129.12	**35.75**	**24**	99.85	21.54	##
5B		3,003	11.22	0.26	1.49	**16.67**	62.93	50.80			34.13	46.25	##
6		18,755	3.67	1.59	1.64	**6.02**	9.65	16.94	**3.15**	**6**	10.92	3.62	##
7A		4,618	6.41	0.39	1.58	**10.13**	15.95	22.92	**11.75**	**7**	12.79	5.83	##
7B		11,219	5.44	0.95	1.60	**8.69**	13.35	15.95			7.27	4.67	##
9		9,645	11.50	0.82	1.52	**17.54**	15.95	64.16	**18.25**	**31**	46.62	(1.58)	##
11		12,628	4.18	1.07	1.64	**6.85**	17.94	22.94	**7.52**	**10.00**	16.10	11.09	##
14		9,153	0.78	0.78	1.86	**1.45**	0.00	6.53			5.08	(1.45)	##
20		12,559	11.20	1.07	1.52	**17.06**	36.35	43.32	**18.75**	**40**	26.26	19.29	##
22		755	4.38	0.06	1.63	**7.13**	6.51	12.02	**7.20**	**34**	4.88	(0.62)	##
23		16,152	4.12	1.37	1.68	**6.91**	10.11	14.29	5.13	23	7.38	3.20	##
24		11,148	7.90	0.95	1.63	**12.84**	6.57	29.68	**13.75**	**28**	16.84	(6.27)	##
25A		916	2.91	0.08	1.65	**4.81**	9.97	34.16			29.35	5.16	##
25B		6,319	1.97	0.54	1.69	**3.32**	4.00	6.83	**5.15**	**25**	3.50	0.68	##
26		17,182	4.49	1.46	1.62	**7.26**	16.13	14.65			7.39	8.87	##
27A		4,475	2.53	0.38	1.74	**4.40**	7.68	12.37	**9.80**	**16**	7.97	3.29	##
27B		526	0.04	0.04	2.62	**0.12**	0.00	2.93			2.82	(0.12)	##
27C		5,167	0.44	0.44	1.97	**0.87**	0.00	3.12			2.25	(0.87)	##
29		7,447	1.36	0.63	1.78	**2.41**	3.41	4.82	**1.25**	**26**	2.41	1.00	##
30		5,532	3.03	0.47	1.67	**5.04**	10.05	10.05	**6.18**	**29**	5.01	5.01	##
31		14,072	1.20	1.20	1.80	**2.15**	0.00	3.41			1.26	(2.15)	##
32		6,707	10.74	0.57	1.49	**15.99**	79.93	62.93			46.94	63.94	##
33		10,461	2.85	0.89	1.69	**4.81**	7.79	8.81			4.00	2.97	##
36		1,606	0.14	0.14	2.24	**0.31**	0.00	1.70			1.39	(0.31)	##
42		2,596	10.13	0.22	1.53	**15.54**	45.18	42.61			27.07	29.64	##
43A		11,011	2.41	0.94	1.99	**4.79**	4.59	11.85	**5.70**	**37**	7.06	(0.20)	##
43B		4,747	0.40	0.40	1.72	**0.69**	0.00	4.17			3.47	(0.69)	##
44		3,945	0.34	0.34	2.03	**0.68**	2.31	7.15			6.47	1.63	##
45		10,981	1.33	0.93	1.83	**2.45**	3.06	13.52	**3.12**	**47**	11.07	0.61	##
46		12,436	1.46	1.06	1.76	**2.58**	2.41	3.88			1.30	(0.17)	##
48		2,160	0.18	0.18	2.17	**0.40**	0.00	1.95			1.55	(0.40)	##
49		5,840	0.50	0.50	1.95	**0.97**	0.00	3.04			2.08	(0.97)	##
51		8,148	7.40	0.69	1.58	**11.71**	12.98	12.98	**14.00**	**12**	1.27	1.27	##
53		2,639	0.22	0.22	2.12	**0.48**	0.00	1.12			0.65	(0.48)	##
54		133	0.69	0.01	1.89	**1.29**	16.01	13.70			12.41	14.72	##
56		10,251	0.87	0.87	1.85	**1.61**	0.00	2.52			0.91	(1.61)	##
57A		4,004	16.97	0.34	1.47	**24.99**	17.70	27.15			2.16	(7.29)	##
57B		9,345	17.95	0.79	1.47	**26.34**	27.15	24.77	**28.25**	**4**	(1.58)	0.80	##
57C		2,338	0.20	0.20	2.15	**0.43**	0.00	3.90			3.47	(0.43)	##
63		6,839	0.58	0.58	1.92	**1.11**	0.00	4.29			3.18	(1.11)	##
70		7,768	1.35	0.66	1.78	**2.39**	6.60	9.65			7.25	4.20	##
71		15,848	2.15	1.35	1.78	**3.82**	0.00	7.88	**3.49**	**30**	4.06	(3.82)	##
73		2,559	0.22	0.22	2.13	**0.46**	0.00	10.05			9.58	(0.46)	##
74		14,423	1.67	1.23	1.75	**2.91**	7.05	6.48			3.56	4.13	##
75		13,829	1.97	1.18	1.72	**3.38**	2.71	3.72			0.34	(0.67)	##
76		5,208	0.44	0.44	1.97	**0.87**	0.00	1.52			0.65	(0.87)	##
78		14,940	2.66	1.27	1.68	**4.47**	3.81	5.40			0.93	(0.66)	##
81		19,190	1.63	1.63	1.75	**2.85**	0.00	3.18			0.33	(2.85)	##
86		13,526	1.15	1.15	1.80	**2.07**	0.00	6.60			4.53	(2.07)	##
87		3,224	1.57	0.27	1.75	**2.75**	3.66	8.77			6.02	0.90	##
88		16,313	1.39	1.39	1.77	**2.46**	0.00	3.80			1.34	(2.46)	##
94		8,072	0.69	0.69	1.89	**1.29**	0.00	3.90			2.61	(1.29)	##
95		9,293	0.79	0.79	1.86	**1.47**	0.00	2.71			1.24	(1.47)	##
97		7,941	0.67	0.67	1.89	**1.28**	0.00	7.81			6.53	(1.28)	##
99		0	38.92	0.00	1.40	**54.65**	78.20	78.20			23.55	23.55	##
111		8,576	0.73	0.73	1.88	**1.37**	0.00	5.29			3.92	(1.37)	##
113		8,544	0.73	0.73	1.88	**1.36**	0.00	3.94	**0.37**	**11**	2.57	(1.36)	##
114		4,767	0.41	0.41	1.99	**0.81**	0.00	1.09			0.28	(0.81)	##
20A				5.35	1.17	**6.26**			**6.27**	**20**			##

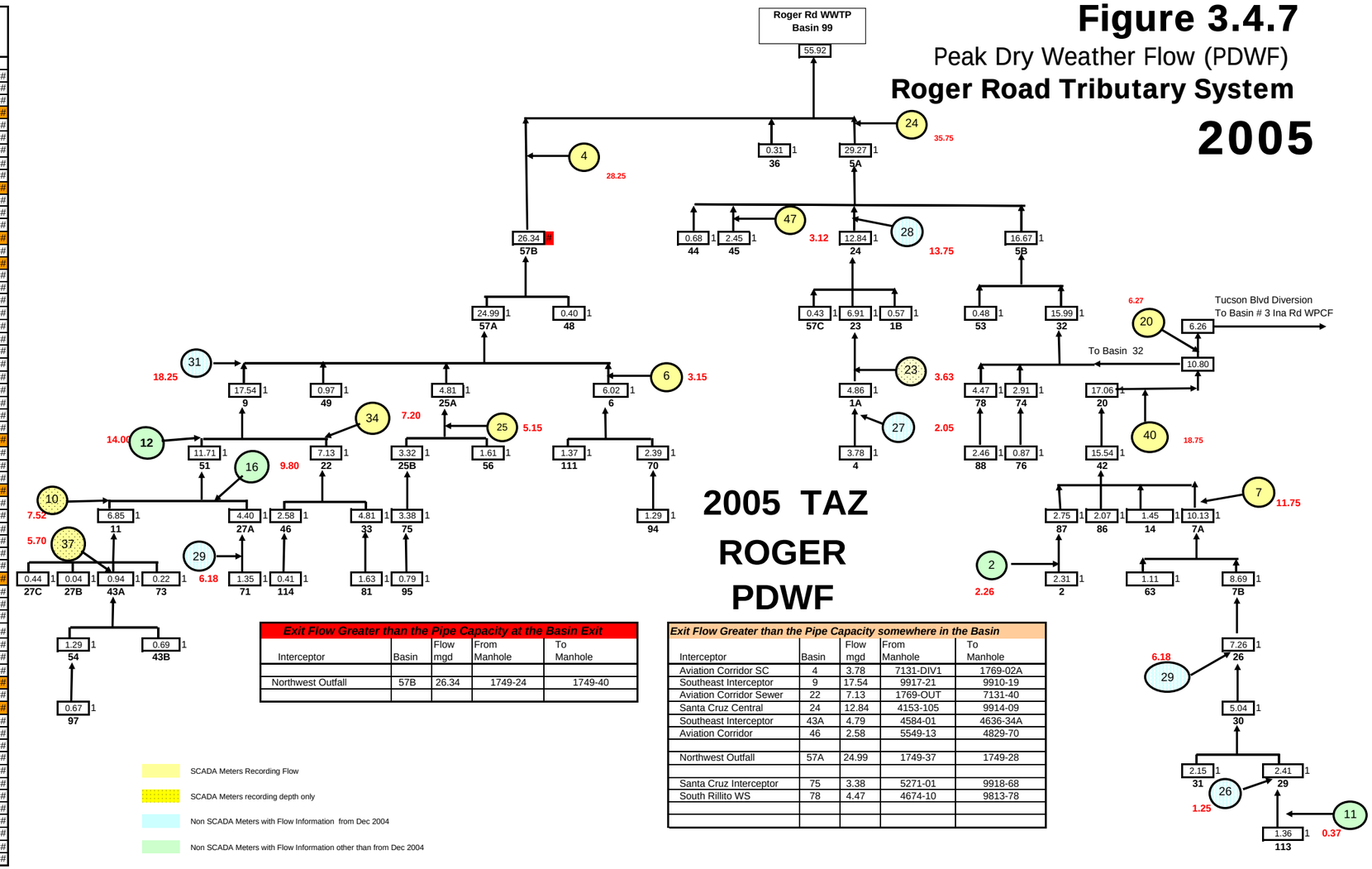

Exit Flow Greater than the Pipe Capacity at the Basin Exit				
Interceptor	Basin	Flow mgd	From Manhole	To Manhole
Northwest Outfall	57B	26.34	1749-24	1749-40

Exit Flow Greater than the Pipe Capacity somewhere in the Basin				
Interceptor	Basin	Flow mgd	From Manhole	To Manhole
Aviation Corridor SC	4	3.78	7131-DIV1	1769-02A
Southeast Interceptor	9	17.54	9917-21	9910-19
Aviation Corridor Sewer	22	7.13	1769-OUT	7131-40
Santa Cruz Central	24	12.84	4153-105	9914-09
Southeast Interceptor	43A	4.79	4584-01	4636-34A
Aviation Corridor	46	2.58	5549-13	4829-70
Northwest Outfall	57A	24.99	1749-37	1749-28
Santa Cruz Interceptor	75	3.38	5271-01	9918-68
South Rillito WS	78	4.47	4674-10	9813-78

SCADA Meters Recording Flow

SCADA Meters recording depth only

Non SCADA Meters with Flow Information from Dec 2004

Non SCADA Meters with Flow Information other than from Dec 2004

Population Increase By Sewer Basin For Years 2005 - 2030

2005 TAZ Data

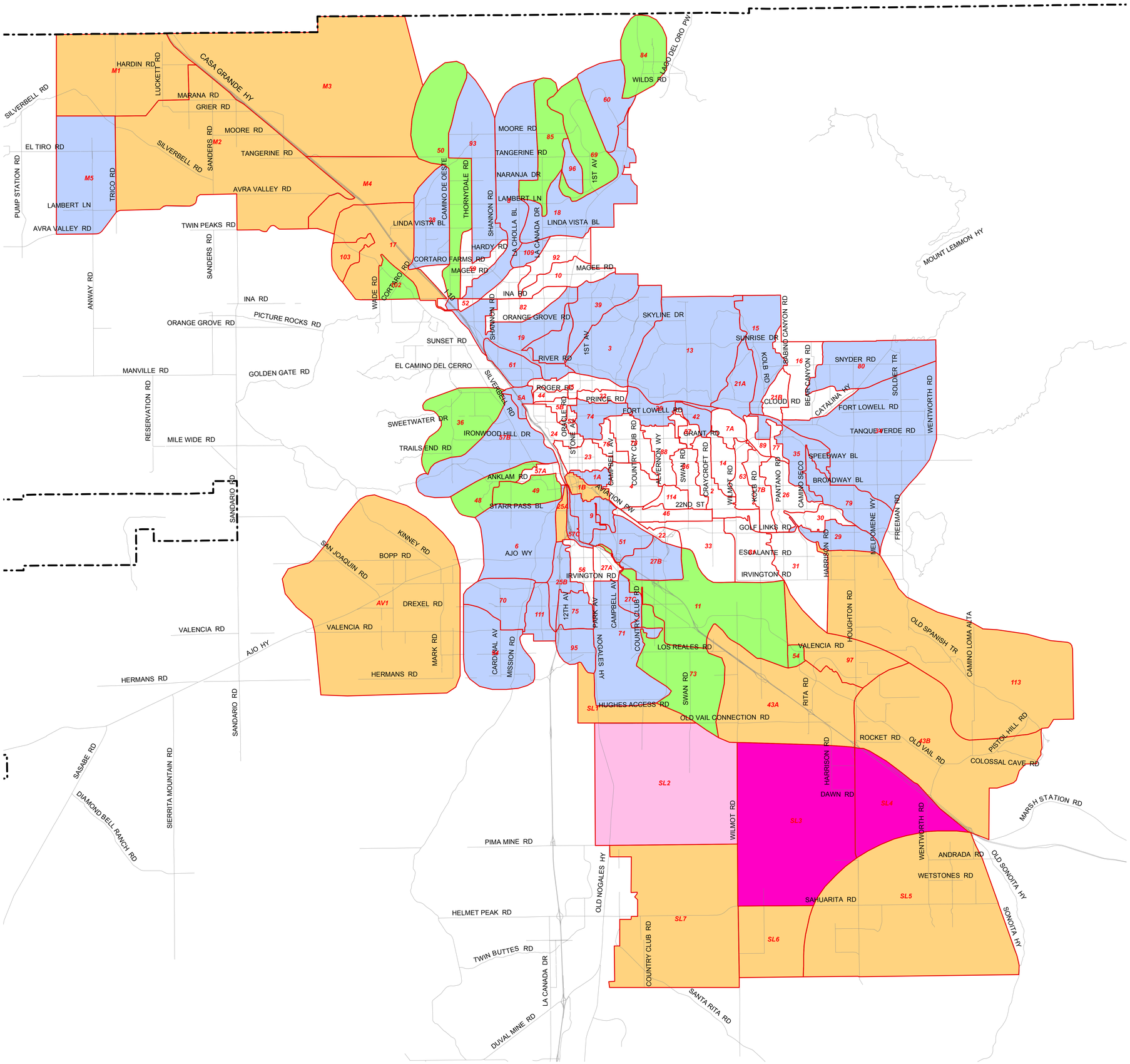

Basins

Major Streets

> 1000% Increase

500 - 1000% Increase

100 - 500% Increase

50 - 100% Increase

10 - 50% Increase

< 10% Increase

Figure 3.4.8

Pima County Index Map

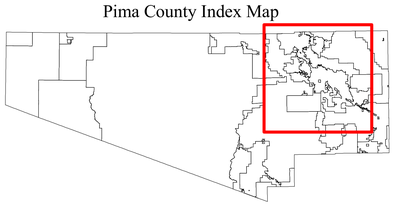

Index Map Scale 1:1,500,000

The information depicted on this display is the result of digital analyses performed on a variety of databases provided and maintained by several governmental agencies. The accuracy of the information presented is limited to the collective accuracy of these databases on the date of the analysis. The Pima County Department of Transportation Technical Services Division makes no claims regarding the accuracy of the information depicted herein.

This product is subject to the Department of Transportation Technical Services Division's Use Restriction Agreement.

N

Scale 1:90,000

Pima County Department of Transportation

TECHNICAL SERVICES

Pima County Technical Services
201 North Stone Avenue - 9th Floor
Tucson, Arizona 85701-1207
(520)740-6670 - FAX:(520)798-3429
http://www.dot.co.pima.az.us

THE SEAL OF PIMA COUNTY ARIZONA

pygmyowl4/projects/wwm8/mxds/pop_increase.mxd mp 11/23/2005

SUB-CHAPTER 3.4 POPULATION EFFECTS

The Facility Plan's primary purpose is to provide the PCWMD with a document for development of long-range plans for Pima County's sewerage system. The development of long-range plans for PCWMD relies upon the projection of the magnitude and location of future population, which results in sewage flows to the Conveyance System being conveyed to downstream Treatment Plants. These flows are primarily dependent upon population size, growth and distribution. The Facility Plan Model (the Model) has been developed to meet the need to predict future population trends and their effects upon PCWMD's Conveyance and Treatment systems.

The Facility Plan Model

The Model utilizes population forecasts developed by Pima Association of Governments (PAG) to predict population growth within the area served by PCWMD's metropolitan and outlying treatment plants. PAG population forecasts are a consensus developed by the planning agencies of local governmental authorities of Pima County. Planners from Pima County, Tucson, Oro Valley, Marana, Sahuarita and South Tucson are consulted and assist PAG in arriving at the forecasts. The planners consider land use and zoning among the many factors influencing development and population concentrations. These forecasts are presented as individual population forecasts for each of the Transportation Analysis Zones (TAZ) developed by the Pima Association of Governments (PAG). The TAZ population forecasts are reviewed and updated as needed to reflect significant variation from the previously published information. The data in the PAG "2002 Population Handbook," published in July 2002, was recently updated (October 2004) to include actual development variations occurring since 2002 and influencing the individual TAZ tract forecasts.

The TAZ forecasts predict the population in each TAZ zone in 5-year intervals, from the years 2000 through 2030. The TAZ zones are the specific geographic areas developed by PAG staff. Statistical data, including population, is assigned to each zone from census data, in this case for the 2000 base year. The population forecast for succeeding five year intervals based upon input from the planning staffs of the participating county and municipal entities. The TAZ zones vary size from several square blocks within the city to tens of square miles in less populated outlying areas of the County. The location of each TAZ zone is identified within the Pima County GIS system and available from the GIS database. (See Figure 3.4.1) The population is spread equally throughout each TAZ zone by dividing the TAZ zone population by the TAZ zone area to arrive at a population density per unit of area.

The Model utilizes population forecasts developed by PAG to predict growth within the PCWMD sewer basins, as well as in areas served by outlying treatment plants. The Model, using GIS capabilities, translates population growth per TAZ zone to population growth per sewer basin. The description of how the County GIS system accomplishes this translation is presented in the Appendices.

The Sewer Basin

The Model considers two types of sewer basins; sewer basins tributary to the Roger Road WWTP and Ina Road WPCF; and sewer basins tributary to the Outlying Wastewater Treatment Facilities (WWTFs). Basins tributary to the Outlying WWTFs are labeled with an alphanumeric designation on the Sewer Basin map. Basins tributary to the Roger Road WWTP and Ina Road WPCF are labeled with a numeric designation on the Sewer basin map. (See Figure 3.4.2)

Sewer basins tributary to the Roger Road WWTP and Ina Road WPCF treatment plant/tributary area, are the portions of the actual pipe network ultimately emptying into the treatment facilities. The sewer basin numbering presented in Figure 3.4.2 is a random assignment and not indexed to either treatment facility. The treatment plant tributary area ends with the sewer basin emptying into each treatment plant. The Model considers only sewer basins whose discharge pipe is 15 inches in diameter or larger.

The sewer basins emptying to Roger Road WWTP are Basin 57, the Northwest Outfall (NWO) Basin 5A, the combined flow of the South Rillito Interceptor (SRI), the Santa Cruz Central (SCC) and Santa Cruz East (SCE) Interceptors and Basin 36, the pumped discharge from the Tucson Mountain Foothills (see Figure 3.4.3). The sewer basins emptying to Ina Road WPCF are Basin 17, the Continental Ranch Wastewater Pump Station (WWPS) discharge; Basin 19, the North Rillito Interceptor (NRI) and Basin 8, the Canyon del Oro Interceptor (CDO) (see Figure 3.4.4).

The Model determines basin discharge flow by identifying the flow from an upstream contributing basin, calculating the flow within the basin under consideration and summing the two flows to arrive at basin discharge flow. There are three classes of basins; those with no upstream basin, those that have both an upstream and downstream basin and those that discharge into the treatment plant as described in the previous paragraph. Basins, such as Basin 71 (serving the area northwest of the airport) have no upstream basin and empty to a downstream basin at a single point. The location of a discharge manhole, identified by PCWMD's Engineering Planning Section as the basin outlet, and then tracing the branching pipes from this point until the branching pipes terminate determine the basin's area. A second class of basin, such as Basin 3 NRI, conveys upstream basin discharge through Basin 3, adds the flow of Basin 3 and discharges the flow at its discharge manhole.

The pipe connecting the inlet and discharge manholes, in this case the NRI, is shown diagrammatically in Figure 3.4.4. Basin 3 also has a sewer basin drainage area of its own consisting of the pipes less than 15 inches in diameter that empty into the Interceptor between basins 3's upstream and downstream manhole. These pipes are also traced upstream through their branching pipes until termination, thereby defining the basin.

Sewer basins tributary to the Outlying treatment plants have been developed independently of an actual sewer pipe network. The primary purpose of these conceptual sewer networks is to facilitate prediction of average daily flow to each outlying treatment plant over the next twenty-five years (until the year 2030). As the sewer network in these areas is largely undeveloped, sewer basin areas were assigned based on topography and estimated population growth. Referring to the sewer basin map, Figure 3.4.2, the actual Marana WWTF is shown with five tributary basins, M1, M2, M3, M4 and M5. The actual Avra Valley WWTF is shown with a single tributary basin, AV1. The remaining Outlying facility, the Southlands Collection Point, is more complex. The Southlands Collection Point is referred to as the Southlands WWTF in this Facility plan to increase the readability of the text and does not infer that a treatment plant is planned in this location.

The Southlands WWTF has been conceptualized to serve the area roughly between I-19 east to the Sonoita highway and from a mile south of Sahuarita Road north to a mile south of I-10. The location of the Southlands WWTF is in the vicinity of the Hughes Access Road and Old Nogales Highway. This is an idealized (not actual) site, being the low point in the Southlands drainage area. The Southlands WWTF has seven tributary basins SL1, SL2, SL3, SL4, SL5, SL6 and SL7. Basin SL5 is the area considered feasible to empty into the Corona de Tucson WWTF. The sewer network shown for SL5, as well as the other basin in the Southlands, is imaginary.

The consideration of SL5 as a separate basin allows prediction of future flows to the Corona de Tucson WWTF. The average flow to the Southlands WWTF includes SL5, as though Corona de Tucson did not exist, to facilitate prediction of total future flows in the Southlands WWTF tributary area.

The Model consists of a GIS and an Excel module. The GIS module is used to translate TAZ zone population to sewer basin population. The Excel module uses the sewer basin population to determine both Average Dry Weather Flow (ADWF) and Peak Dry Weather Flow (PDWF). The GIS module identified flows in each basin and accumulated flows to the treatment plants. This module worked with no problems for most cases, however at the time of model development, no reasonably effective way could be found for the GIS module to accommodate the numerous flow splits, such as the Tucson Boulevard Diversion, nor the unusual flow additions such as from the Prison complex on South Wilmot Road.

The Excel module considers existing as well as future Outlying WWTFs and the Roger Road WWTP and the Ina Road WPCF separately. Further, the model considers each five-year period from 2005 to 2030 as a separate case. Each five-year period is presented in three flow charts; one each for Population, Average Dry Weather Flow and Peak Dry Weather Flow. (See Figures 3.4.5, 3.4.6, and 3.4.7 for Roger Road WWTP in the year 2005).

Population Chart

The Population flow chart (Figure 3.4.5) contains a table and hierarchical line diagram of the basin. The relevant Treatment Plant is at the apex of its branching basin system. The population for each basin, determined in the GIS module, is modified to present the number of people in each basin connected to the PCWMD sewer system and then shown in the table on the left side of the flow chart. The box below the basin number in the line diagram contains the total population on sewer upstream of the basin entrance while the box above the basin number contains the total population on sewer upstream of the basin discharge manhole (population of the upstream basins, plus the population of the basin under consideration.) The column "Upstream Population" identifies the total population upstream of the subject basin's discharge manhole.

This population is used as input to the Peaking Factor Formula as defined in the Arizona Administrative Code Title 18 Environmental Quality, Chapter 9 (R18.9-9-E 301.4.01.Cii.) Department of Environmental Quality Water Pollution Control, Article 3 Aquifer Protection Permits, Part E, Type 4 General Permits, 4.01 General Permit: Sewage Collection Systems, D. Design Requirements, General Provisions, C. Use for gravity sewer lines as appropriate, "Any point in a sewer collection system can accommodate a peak flow for all population upstream from that point as tabulated in the following formula":

The use of this formula resulted in the Peaking Factors displayed in Table 3.4.1.

Table 3.4.1 Peaking Factors

Upstream Population	Peaking Factor
1,001 to 10,000	PF = (6.330 x p - 0.231) + 1.094
10,001 to 100,000	PF = (6.177 x p - 0.233) + 1.128
More than 100,000	PF = (4.500 x p - 0.174) + 0.945
PF = Peaking Factor	
p = Upstream Population	

The population connected to the PCWMD sewer system is critical for determining the proper flow in the conveyance system and to the treatment plants. The percentage of each basin's population on septic systems was estimated by overlaying the sewer pipe network on aerial photos of the basin and noting the houses not connected to the sewer pipes. These people were then subtracted from the 2005 basin populations. The total population growth in each basin beyond 2005 is considered connected to the sewer system and the population growth is added to the 2005 population on sewers to arrive at the number of people in each basin for 2010, 2015, 2020 2025 and 2030. The population growth information, contained in Table 3.4.2., by contrast is total number of people residing in the sewer basin regardless of whether they are connected to the sewer.

ADWF Chart

Figure 3.4.6 is arranged in the same hierarchical format as the Population Chart. The table at the left side of the Figure reads the population chart to obtain the basin population. The basin Flow ADWF is the product of the basin population multiplied by the gallons per day per person multiplied by (1 minus the percentage of the population in the basin on septic systems). The wastewater flow used in this analysis is 85 gallons per day per person gallons customized for each basin to account for newer homes with more efficient toilets and other factors considered significant. The percentage of population on septic systems in the year 2005 is also a variable and can be customized for each basin based on available data. The model considers that no population increases after 2005 will be on septic systems but that all population increases will be served by the PCWMD system. Similar to the Population chart, the box below the basin number contains the ADWF at the basin inlet and the upper box contains the outlet ADWF culminating in the ADWF to the Roger Road WWTP. The ADWF at the basin outlets are also listed in the table.

The chart also contains the features that the present GIS module could not adequately account for. Note that the chart allows for flow inputs from sources other than population alone. The influx of daytime population to the central city area (Basin 1B), the University (Basin 1A) and Davis Monthan (Basin 33) and its effect on the sewer system are considered as well as other large inputs from the prison complex (Basin 43A), and the airport (airport and Hughes plant, Basin 71). The Excel module also handles flow splits and flow diversions such as the Tucson Boulevard Flow Management Structure (TBFMS) (Basin 20), the Alameda Siphon flow split between the NWO and the SCC (Basin 24), the Aviation Corridor flow split at Kino Boulevard to the SCE (Basin 4.) The Excel module also considers the effects of the Randolph Park Water Reclamation Facility (WRF). The additional flows into the system are the best estimates of the PCWMD Engineering Division while the flow splits are either the results of meter readings or diversion board placement obtained from the PCWMD Operations Division.

The final features contained in the table and on the flow chart are meter readings. The meter readings are from November and December 2004 only and are color coded as follows:

- Yellow — SCADA meters recording flow MGD.
- Shaded Yellow — SCADA meters recording depth only (inches).
- Blue — Non SCADA meters with flow from Nov-Dec 2004 (MGD).
- Green — Non SCADA meters with flow from dates other than Nov-Dec 2004.

The meters' location in relation to the basin hierarchy is shown on the flow chart. The meter readings are only shown on the 2005-year flow charts, as the readings recorded in 2004 only have validity for 2005. These meter readings could not be used to validate flow forecast 5 to 25 years in the future.

The meters provided the actual recorded flow against which the estimated flow determined by the model was evaluated. These readings provided the information to calibrate the model, which then was felt to have strong validity as it reflected that the theoretical flows closely corresponded to the actual metered flows.

PDWF Chart

This chart (Figure 3.4.7) is arranged in the same hierarchical format as the previous two flow charts. The major variation is that the chart only shows the Peak Dry Weather Flow (PDWF) at the basin discharge. The basin population and peaking factors are those determined in the Population Flow Chart. The basin interceptor flow is obtained from the ADWF Flow Chart. The PDWF at each basin exit is calculated by multiplying the previously determined ADWF by the Peaking Factor determined in the Population Flow Chart. The capacity of the pipe at the entrance and exit from each basin are "full pipe" capacities obtained from a system capacity map included in the 1990 Facility Plan that has been revised to reflect changes in the system since 1990 (See Figure 4.2.1). The PDWF meter readings are taken from the same meters and at the same time as the ADWF readings. The PDWF meter reading selected for use in the table varies from the absolute peak meter reading in many cases. The actual meter readings are recorded at one-minute intervals throughout the day. An examination of these recordings often shows the maximum-recorded peak value is a single recording far in excess of neighboring recorded values. The peak value used in the table is a flow recording higher than 99 percent of all the readings taken.

The column in the table titled "Capacity, 85 percent of full pipe capacity" is the capacity of the pipe at 85 percent of full pipe capacity [75 percent depth (d) divided by pipe Diameter (D).] The rationales for using the 85 percent value as an alert value are:

- 15 percent of the pipe capacity is available for Rainfall Derived Inflow and Infiltration (RD I/I).
- The 85 percent notification provides time for PCWMD to initiate and complete corrective action.

The column titled "Over Exit Capacity Indicator" gives the result of subtracting the PDWF calculated from the value of the 85 percent full capacity of the pipe at the basin exit. A negative number will cause the cell containing this result to turn red if the PDWF exceeds basin exit capacity. The negative number also causes the cell adjacent to the basin PDWF in the flow chart to turn red. The adjacent column titled "Over Enter Capacity Indicator" is the remainder from subtracting the basin PDWF from the 85 percent of full capacity of the pipe at the entrance to the basin. The cell in the column immediately to the right of this remainder will be colored orange if the PDWF exceeds the entrance capacity of the basin and the entrance capacity is not zero. A basin without an upstream basin has an entrance flow of zero. These indicator warnings are a signal that this basin should be checked by PCWMD Engineering to verify or discount the warning.

Conclusions and Recommendations

The Facility Plan Model is not an exact replica of the sewer system as are PCWMD's sewer hydraulic software models. The Facility Plan Model is a simplified capacity model. The model takes license with reality in several instances in regards to Interceptor routing. The GIS system ties the basin together by connecting the entrance manhole to exit manhole and not necessarily along the actual interceptor path. The model cannot accurately consider a basin with multiple outlets and therefore the most dominant exit manhole for each basin was chosen (example Basin 14 discharge along Craycroft Road). The model considers the multiple pipes in Basin 32 and 5B as a single pipe [the South Rillito Interceptor (SRI) from Tucson Boulevard along Pastime, Roger and Prince Roads]. The capacity assigned to this section is that of the 60-inch pipe along Pastime Road whose capacity far exceeds the flow in this basin.

Although not specifically discussed here, the system tributary to Ina Road WPCF functions in a similar manner to what has been described here. The Ina Road WPCF model is more straightforward than the Roger Road WWTP model in that there are no diversions of flow and only the addition of flow to the North Rillito Interceptor (NRI) at Tucson Boulevard from the diversion of SRI flow. The only feature unique to the Ina Road WPCF system is that the Continental Ranch WWPS is considered as the inlet manhole to the Ina Road WPCF. The force main is not considered as it is well beyond the capabilities of this model. The metered flow into the Continental Ranch WWPS is actually the flow recorded by Operations during Nov-Dec 2004.

Table 3.4.2 presents a comparison of PAG's population forecasts with the population in the basin tributary to the Roger, Ina, Avra and Marana treatment plants and "the Southlands" area (i.e., Population in Sewer Basin). These are total numbers, not just the people connected to the PCWMD sewer system.

Table 3.4.2 Population Comparisons

Year	PAG Eastern Pima County Population	Total[1] Population in PCWMD Sewer Basins	Roger Road WWTP Sewer Basin Population	Ina Road WPCF Sewer Basin Population	Total[2] Population in Outlying Sewer Basins
2000	767,855	489,399	243,238	35,218	
2005	916,028	837,571	520,536	256,164	60,871
2010	1,023,332	928,849	563,158	269,565	96,125
2015	1,141,690	1,031,142	607,065	283,032	141,046
2020	1,259,689	1,113,129	650,791	296,398	185,940
2025	1,378,155	1,235,513	694,750	309,895	230,868
2030	1,496,045	1,337,400	738,416	323,233	275,750

1. Roger Road, Ina Road, Avra Valley and Marana Treatment Plants and Southlands Area.
2. Avra Valley and Marana Treatment Plants and Southlands Area.

The additional information relating to the findings for ADWF to the treatment plants and PDWF in the conveyance system is found in Chapters 5 and 4, respectively.

The Facility Plan Model converted the October 2004 PAG TAZ zone information for the years 2005, 2010, 2015, 2020, 2025 and 2030 into sewer basin populations for those years. The basin population forecasts also include the percentage increase in population in each basin from 2005 to 2030. This same information is presented graphically in Figure 3.4.8. The model then

modified these basin population figures to arrive at the population associated with each sewer and resulting ADWF flows to the treatment plants and PDWF in the conveyance systems.

PCWMD plans to utilize the Facility Plan Model to update the Conveyance System and Treatment Plant flow projections as PAG issues updated forecasts, but at planned intervals every two years. The Model will be updated to operate entirely within the GIS environment in the near future, which will permit closer integration with PAG data. PAG is planning to change from TAZ zone forecasting to a system of population forecasting for each acre of land in Pima County. This will permit accounting for zoning and land use in forecasting. The ease and timeliness of model update accuracy will also be facilitated by the increase in the number of SCADA meters installed in the collection system that can be used for model calibration.

See the following Figures 3.4.1 to 3.4.8.