Chapter 4 Conveyance System

CHAPTER OVERVIEW

Chapter 4 focuses on Pima County Wastewater Management Department's (PCWMD) conveyance system, including sewer lines, manholes, flow management structures and lift stations. These systems service the Pima County Metropolitan Area and the cities of Tucson and South Tucson; the towns of Marana, Oro Valley and Sahuarita; and unincorporated communities such as Summerhaven, Arivaca Junction, Avra Valley, Green Valley, Corona de Tucson and Catalina as well as Pima County. Portions of the system date back to 1900 and include nine different pipe materials.

The planning drivers discussed in Chapter 3 with the biggest impact on the conveyance system are asset management and population effects. The asset management driver for the conveyance system relates to rehabilitation projects to maintain the integrity of the system. The regulatory driver for conveyance relates to the Capacity, Management, Operations and Maintenance (CMOM) program. The population growth in the Planning Area dictates capacity expansion needs. The institutional framework driver has negligible impact on the future conveyance system.

In 2003, PCWMD commissioned a collection system condition assessment as part of their on-going asset management program to evaluate about 230 miles of trunk and interceptor sewers. This assessment was performed utilizing the National Association of Sewer Service Companies (NASSCO) condition codes ranging from "excellent" to "immediate attention required." The resulting list of prioritized rehabilitations and replacements derived from this condition assessment are summarized in this Chapter 4 Conveyance and in Chapter 8 Capital Improvement Program (CIP).

The biggest areas of concern are segments of the collection system with unlined reinforced concrete pipe. While these segments only constitute 2 percent of the entire collection system, this pipe material is prone to failure in arid conditions with longer travel times. Hydrogen sulfide gas causes significant corrosion of the concrete, which can result in piping failure. Segments of the collection system were rated as "poor" or "immediate attention required." The portions of the collection system with these ratings include portions of the Aviation Corridor, Canada del Oro, Old Nogales Highway, Pantano, Santa Cruz, South Rillito, Southwest and Tanque Verde Interceptors. Other segments included in the initial condition assessment were rated at a "fair" or "good" condition and were recommended for re-evaluation in 2008. Additional rehabilitation/replacement needs identified for the conveyance system include 1,498 manholes; several siphon boxes and many of the lift station wet-wells, which contain hydrogen sulfide corrosion.

In addition, future conditions were analyzed based on the population effects driver.

The capacity issues involving the conveyance system's large diameter pipe (greater than 15 inches) identified by the Facility Plan Model are minimal, given the age of the system. There are several reasons for the lack of conveyance capacity issues:

- The Metropolitan Conveyance System Interceptors modeled consist of mature basins within the urban area with little or no projected population growth.
- PCWMD in recent decades had the foresight to install interceptors with greater capacity than required by the capacity needs projected at that time. The additional capacity in a gravity sewer does not impair its efficiency and avoids curtailing its useful life due to inadequate capacity.
- Explosive growth is currently occurring in the areas on the edges of the Metropolitan Area, in areas served by the (satellite) Outlying Treatment Facilities or basins on the extreme upstream reaches of the Metropolitan Conveyance System. The conveyance systems in the outlying areas were not included in this 2006 Metropolitan Area Facility Plan Update (Facility Plan).

The Facility Plan Model identifies two classes of capacity problems, Red and Orange. The Orange classification identifies sections of the interceptor with potential capacity problems and suggesting only an engineering study to determine the severity of the problem.

A Red classification indicates that the sewer is forecasted to be flowing at higher than 85 percent of its capacity and corrective action should be instituted.

The model identifies nine (Orange) sections of interceptor for further study in 2005 and only one (Red) section, the Northwest Outfall, requiring corrective action. Capacity problems in the Northwest Outfall. It will disappear with the installation of the 2004 Bond Authorization funded Santa Cruz Interceptor, Prince to Franklin allowing the cessation of flow from the Southeast Interceptor being directed across the Santa Cruz River utilizing the Alameda Siphon to the Northwest Outfall.

The North Rillito Interceptor capacity problems will cease to be of concern with the installation of the 2004 Bond Authorization funded Plant Interconnect allowing the transfer of flow at the Tucson Boulevard Flow Management Structure.

The early identification of potential capacity problems for the years 2010 and beyond will allow PCWMD to institute corrective action.

SUB-CHAPTER 4.1 EXISTING CONVEYANCE FACILITIES

Pima County Wastewater Management Department owns and operates eight collection and treatment systems within a 370 ± square mile sanitary sewerage system service area in eastern Pima County. PCWMD's conveyance system includes 3,300 miles of public sanitary sewers including 60,000 manholes, 15 siphons, 4 flow management structures and 34 lift stations (4 inactive). These sewers are located in the cities of Tucson and South Tucson; the towns of Marana, Oro Valley, and Sahuarita; and unincorporated communities such as Summerhaven (Mt. Lemmon), Arivaca Junction, Avra Valley, Green Valley, Corona de Tucson, and Catalina. Approximately 230 miles are considered trunk or interceptor sewers, 15 inches internal pipe diameter and larger.

The Metropolitan Conveyance System dates from 1900 to the present and was built using various pipe materials including reinforced concrete (lined and unlined; centrifugally-spun; vertically cast and AZ factor), asbestos cement, ductile iron pipe (DIP), salt glazed clay pipe, vitrified clay pipe (VCP), plastic truss pipe, and polyvinyl chloride (PVC). The conveyance system materials are depicted in Figure 4.1.1a and the conveyance system age distribution in Figure 4.1.1b below. Of particular note is lined and unlined reinforced concrete pipe (RCP) represents only 2 percent of the conveyance system and clay pipe represents 48 percent of the system.

Figure 4.1.1a Pima County Collection System Materials Chart

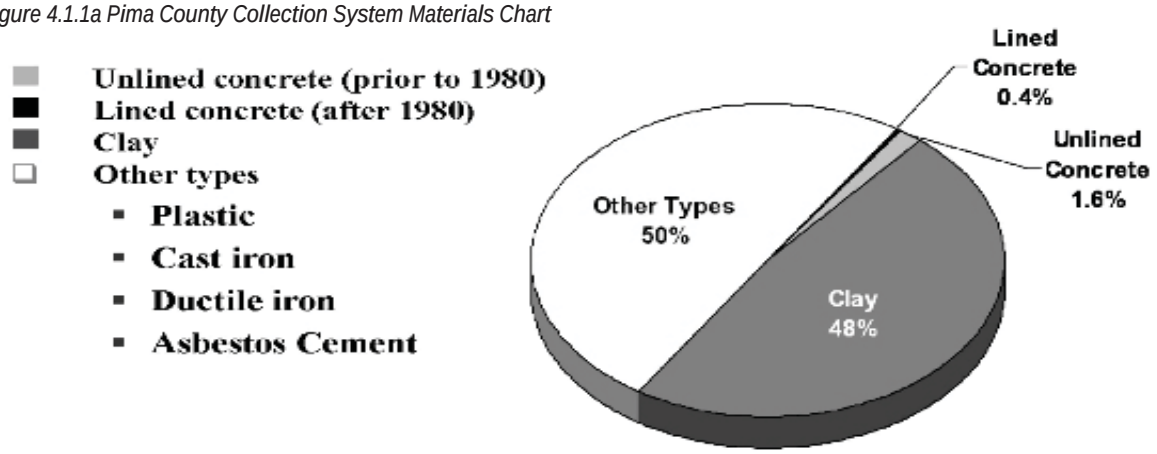

Figure 4.1.1b Pima County Collection System Age Distribution Chart

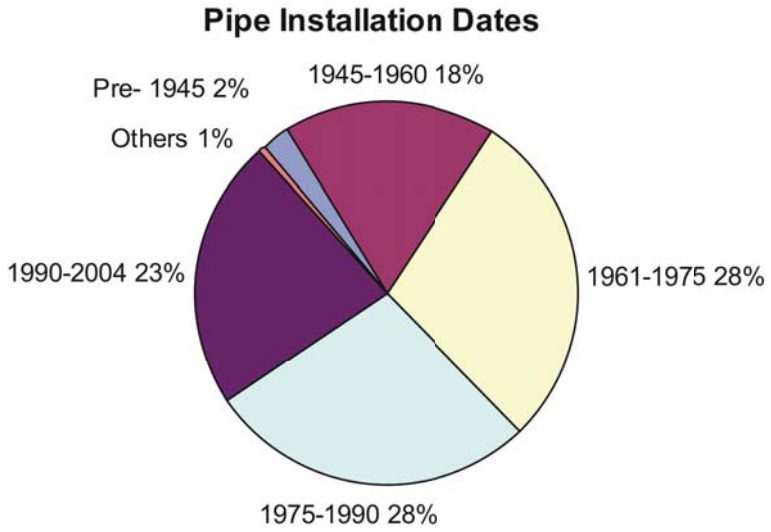

The largest of the systems is the Tucson Metropolitan System. The Metropolitan System conveys flow primarily by gravity to PCWMD's two major wastewater treatment plants, the Roger Road Wastewater Treatment Plant (WWTP) (41 MGD) and the Ina Road Water Pollution Control Facility (WPCF) (25 MGD with a 12.5 MGD expansion under construction). The Metropolitan Conveyance System presently transports approximately 62 MGD Average Dry Weather Flow (ADWF).

Existing Interceptor System and Condition Assessment

Outlined below is a description and condition assessment based on Closed Circuit Television (CCTV) inspections of trunk and interceptor sewers performed in 2003 by Brown and Caldwell in association with ProPipe. Brown and Caldwell provided condition assessment of both lined and unlined RCP, approximately 50 miles. After receiving pipeline assessment and certification program (PACP) training by Brown and Caldwell, PCWMD Design Section staff began to assess the remaining 180 miles (see Appendix C).

Each of the interceptors and trunk sewers were inspected utilizing the NASSCO defect codes. The condition grades depicted in Table 4.1.1 represent the overall grade of a reach, taking into account the severity of every defect code within that pipe.

Figure 4.1.2 depicts the interceptors and trunk sewers located within the Tucson Metropolitan system.

Table 4.1.1 NASSCO Condition Grades

Condition Grade	Grade Description
1 - Excellent	No defects, condition like new, no evidence of any corrosion exhibited.
2 - Good	Minor and few moderate defects noted. Sound structure with little to no documentation of corrosion.
3 - Fair	Moderate defects that will continue to deteriorate. Rehabilitation monitoring is recommended.
4 - Poor	Severe defects that will become Grade 5 sewers within the near future. Rehabilitation is strongly recommended in the near future.
5 - Immediate Attention Required	Sewers require immediate rehabilitation or replacement.

Brief descriptions, history and condition assessment information are provided in the following paragraphs.

Aviation Corridor Interceptor

The Aviation Corridor Interceptor is segmented into two individual lines, which convey flows from the southeast portion of town to the Roger Road WWTP. The Aviation Corridor South Central (ACSC) conveys flow from the flow management structure located at 18th Street and Vine, northwest to the downtown area. The Aviation Corridor South East (ACSE) conveys flows to the Southeast Interceptor from Davis-Monthan Air Force Base, along the Aviation Corridor through the flow management structure.

The downtown portion consists of two major trunks taking flow from southeast of downtown and moving flows northwest to the Roger Road WWTP. One of the lines was originally installed in 1916; the line ranged from 20 to 24 inches in size and was predominantly concrete pipe construction. The other line was brought into the downtown area in 1927 with the addition of 24-inch lines paralleling the Aviation Corridor and the existing alignment downtown. Next, in 1940, the Eastside sewer interceptor was constructed and now the interceptor extended east to Palo Verde Road. In 1941, the system was extended via parallel 15-inch lines from the Davis-Monthan Air Force Base to the then existing sewer at Palo Verde, along the old Golf Links Road alignment. In 1965, a siphon was added to the interceptor at Golf Links and Dodge Road alignment to allow construction of the Tucson Diversion Channel. In 1975, a major trunk was added with a 24-inch line along 29th Street, this trunk extends from Country Club to Craycroft Road. The next significant feature to occur which

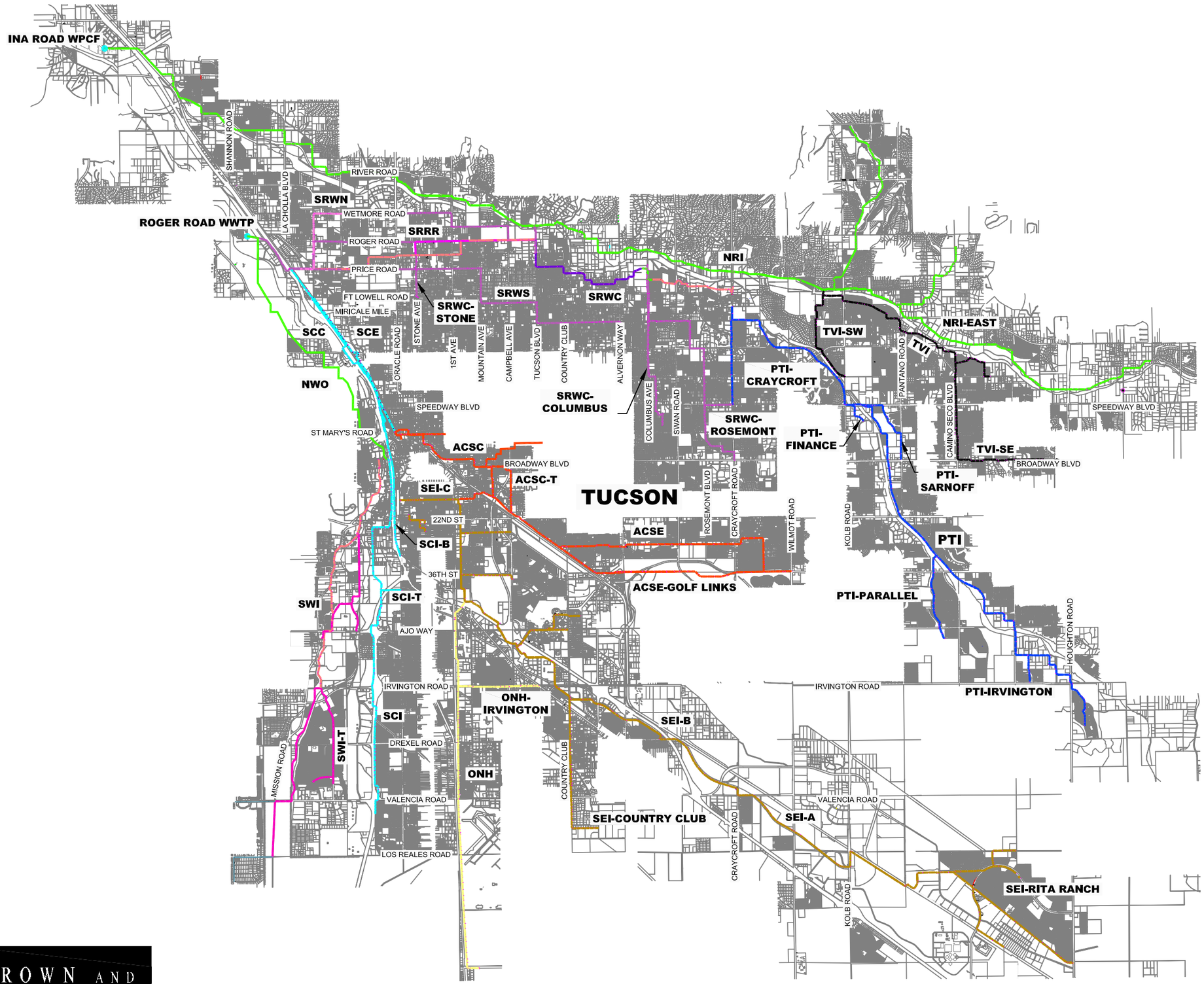

LEGEND

ACS - AVIATION CORRIDOR
- ACSC
- ACSC - TUCSON
- ACSE
- ACSE - GOLF LINKS

NRI - NORTH RILLITO
- NRI
- NRI - EAST

ONH - OLD NOGALES HIGHWAY
- ONH
- ONH - IRVINGTON

PTI - PANTANO
- PTI
- PTI - CRAYCROFT
- PTI - FINANCE
- PTI - IRVINGTON
- PTI - PARALLEL
- PTI - SARNOFF

SC - SANTA CRUZ
- SCC
- SCE
- SCI
- SCI - B
- SCI - T
- NWO - NORTHWEST OUTFALL

SEI - SOUTH EAST
- SEI - A
- SEI - C
- SEI - COUNTRY CLUB
- SEI - DOWNTOWN
- SEI - RITA RANCH

SR - SOUTH RILLITO
- SRRR
- SRWC
- SRWC - COLUMBUS
- SRWC - ROSEMONT
- SRWC - STONE
- SRWN
- SRWS

SWI - SOUTH WEST
- SWI
- SWI - T

TVI - TANQUE VERDE
- TVI
- TVI - SE
- TVI - SW

Figure 4.1.2

PIMA COUNTY INTERCEPTOR MAP

TUCSON, ARIZONA

SCALE : 1" = 10,000'

BROWN AND CALDWELL

P:\Pima_County\127016 - Facility Plan Amendment No. 1\Task 007 Chapter 4 Conveyance\CAD\INTERCEPTORS\AWPCA.dwg May 04, 2005 - 11:03am echristenson

affected the interceptor was the realignment and replacement of the twin sewer configuration along the Aviation Corridor to allow the freeway improvement being done by the Arizona Department of Transportation (ADOT). The existing system was abandoned and replaced with a single sewer, north of the Aviation Corridor and paralleling the original alignment. This pipe replacement went to a 42-inch lined RCP. A flow management structure was also constructed at this time, located at 18th Street and Vine. This flow management structure has the ability to divert flows into the South East Interceptor (SEI) or divert flow north to the Santa Cruz East (SCE) Interceptor.

Aviation Corridor South Central Interceptor CCTV and Condition Assessment Summary

The ACSC Interceptor is 14,439 feet long and begins at a flow management structure located on Vine Avenue, south of 17th Street (see Figure 4.1.3). The line then travels northwest and ends at a manhole on the intersection of Davis Street and Anita Avenue. The flows from the ACSC system empty into the Santa Cruz East (SCE) Interceptor.

There are three (3) ACSC-T trunk segments feeding into the ACSC Interceptor. The ACSC-T with the three segments is 12,052 feet long. The ACSC-T Segment 1 begins at the intersection of 6th Avenue and 5th Street, then heads west on 5th Street and drains into the ACSC. The ACSC-T Segment 2 begins on Campbell Avenue, just north of the Aviation Parkway, then heads northwest and proceeds west along 12th Street and drains into the ACSC at Highland Avenue. The ACSC-T Segment 3 begins at the intersection of 9th Street and Cherry Avenue, and then heads west along 10th Street, proceeds south on Highland Avenue and flows into the ACSC on 12th Street. The ACSC-T1 trunk is 5,380 feet long. The ACSC-T1 begins at the intersection of Forgeus Avenue and 7th Street, then heads west on 7th Street and proceeds south on Norris Avenue, then heads west on 8th Street and proceeds south on Warren Avenue, then heads west on 9th Street and feeds into the ACSC-T Segment 3 on Cherry Avenue. A summary of CCTV inspected interceptor and trunk piping lengths based on pipe diameters is presented below:

Diameter	15”	16”	18”	20”	21”	24”	Total
Length (ft)	13,969	32	320	3,111	3,118	11,321	31,871

Along the ACSC, ACSC-T and ACSC-T1 alignments, there are five different types of piping materials that were used for construction. The predominant material is unlined reinforced concrete pipe rehabilitated with cured-in-place pipe (CIPP), in addition to DIP, VCP, PVC, and unlined non-reinforced concrete pipe (CP). The table presented below details the total CCTV inspected length of interceptor and trunk for each type of pipe material:

Pipe Material	CIPP	VCP	PVC	CP	DIP	Total
Length (ft)	11,321	10,281	2,549	7,688	32	31,871

A significant interceptor rehabilitation project was done in 1991 on a portion of the ACSC line. The line was rehabilitated with CIPP lining from downtown (Main and 4th Street) to Highland Avenue. In addition, in 2004 ACSE-T Segment was rehabilitated with CIPP from Highland and 12th Street north to 9th Street. This project was undertaken by PCWMD based on the results of the 2003 CCTV program. The majority are considered Grade 2 (Good) while the remainder are considered Grade 3 (Fair) requiring monitoring and CCTV re-inspection in 2008. The estimated cost for spot repairs for Grade 4 is $224,000 and for future rehabilitation of 18,001 linear feet of interceptor considered Grade 3 is $4.26 million.

Aviation Corridor South East Interceptor CCTV and Condition Assessment Summary

The ACSE Interceptor is 32,950 feet long and begins at a manhole located on the intersection of Sahuara Avenue and 28th Street (see Figure 4.1.4). The line then travels west on 29th Street,

heads west on Silverlake Road, then travels northwest along the north face of the Aviation Parkway, then crosses the Aviation Parkway and travels west on 18th Street and ends at a manhole on the intersection of Euclid Avenue and 18th Street at the SEI. The flows from the ACSE system can also empty into the ACSC Interceptor at 18th and Vine Street, and flow into the SCE Interceptor.

There is one trunk that feeds into the ACSE Interceptor, ACSE-T, which is 30,203 feet long. The ACSE-T begins at the intersection of Wilmot Road and Golf Links Road, then heads west on Golf Links Road. One segment of the ACSE-T proceeds north on Sahuara Avenue and drains into the ACSE Interceptor; the other segment proceeds west of Craycroft Road on Golf Links Road through the Davis-Monthan Air Force Base, south of Golf Links Road, then heads west across Palo Verde Road via the Palo Verde Siphon, then travels northwest along the north face of the Aviation Parkway and drains into the ACSE Interceptor at a manhole located southeast of Silverlake Road and the Aviation Parkway. A summary of CCTV inspected interceptor and trunk piping lengths based on pipe diameters is presented below:

Diameter	15”	18”	24”	30”	36”	42”	Total
Length (ft)	27,925	2,278	23,415	5,852	1,500	2,183	63,153

Along the ACSE and ACSE-T alignments there are four different types of piping materials that were used for construction. The predominant material is VCP, in addition to DIP, PVC, and T-Lock lined RCP. The table presented below details the total CCTV inspected length of interceptor and trunk for each type of pipe material:

Pipe Material	VCP	DIP	PVC	RCP w/ T-Lock	Total
Length (ft)	45,403	245	8,039	9,466	63,153

Based upon the CCTV investigation and condition assessment, two reaches are considered Grade 2 (Good) while the remainder is considered Grade 3 (Fair) requiring monitoring and CCTV re-inspection in 2008. The estimated cost for spot repairs for Grade 4 is $262,000 and for future rehabilitation of 55,114 linear feet of interceptor considered Grade 3 is $14.15 million.

Cañada Del Oro Interceptor

The Canada del Oro (CDO) Interceptor is divided into seven segmented lines, which convey flow from the Northwest portion of Tucson to the Ina Road WPCF. The central and downstream portion of the interceptor is also the oldest chronologically. The downstream portion starts at the Ina Road WPCF, travels east along Ina Road and then proceeds northeast along the CDO Wash alignment to the most upstream point, along Tangerine Road in Rancho Vistoso. The earliest date of construction for this segment is 1979. This segment of the CDO Interceptor also has unlined concrete pipe in the reaches from Interstate-10 (I10) east to the CDO Wash. There is another trunk to this line, which extends to the Town of Catalina, but it was not included in this interceptor CCTV inspection because of line size (12-inch).

The other segments were installed as part of offsite sewer improvements related to improvement districts. Growth of the CDO interceptor is segmented, directly related to the growth pattern in this portion of Tucson. A majority of the sewers were installed in the 1980s and 1990s. Some of the developments related to these sewers are: Rancho Vistoso, Copper Creek, Countryside, and the North First Avenue Sewer Improvement District. No siphons or flow management structures are associated with the CDO Interceptor. The latest addition to the interceptor group is the trunk installed as part of the offsite sewer improvements for the Dove Mountain development.

Cañada Del Oro Interceptor CCTV and Condition Assessment Summary

The main segments of the CDO Interceptor from north to south are CDO-B and CDO-A. (See Figure 4.1.5)

The CDO-B interceptor is 10,058 feet long and begins just north of the intersection of Rancho Vistoso Boulevard and the Big Wash in the Sun City Rancho Vistoso Development. The line flows under Big Wash then proceeds south along Vistoso Commerce Loop to Tangerine Road where it crosses below the road and drains into the upstream-most manhole of CDO-A.

CDO-A is 62,238 feet long and begins southwest of the intersection of the bridge on Tangerine Road and the Big Wash west of Oracle Road. The interceptor then proceeds under the Big Wash then runs south along the eastern edge of the Big Wash to the Oracle Road and the CDO Wash crossing bridge. At the bridge, the line passes below the CDO Wash then proceeds east under Oracle Road where it turn south and runs south again parallel to Oracle Road in the eastern utility right-of-way. The line then passes below the Oro Valley Country Club Golf Course where it again crosses under the CDO Wash. At the CDO Wash, the line then proceeds southwest along the northern bank until it reaches Ina Road. Thereafter, the line runs west along the eastern edge of Ina Road, cuts across I-10 and enters the inlet manhole at the Ina Road WPCF.

CDO-T1 is 28,797 feet long and is divided into three segments. Segment 1 begins northeast of the First Avenue and CDO Wash crossing bridge then heads southwest along Lambert Lane to empty into the CDO-A interceptor just north of the CDO Wash. Segment 2 of the CDO T1 begins 500-feet north of the intersection of Copper Creek and Naranja Drives then heads west on Naranja Drive. At the intersection of Naranja and La Cañada Drives the line proceeds south across Lambert Lane and drains into the CDO-A north of the CDO Wash. CDO-T1 Segment 3 begins at Lambert Lane west of La Cholla Boulevard and then proceeds south along La Cholla Boulevard and empties into the CDO-A interceptor at the intersection of La Cholla Boulevard and Overton Road.

CDO-T2 is 18,876 feet long and begins at the intersection of Palo Seco Road and Thornydale Road. The line runs south on Thornydale Road along the eastern utility right-of-way, then crosses below Thornydale Road and proceeds southwest along Orangewood Drive. At the intersection of Orangewood Drive and Oldfather Road, the line flows south along Oldfather Road and then drains into the CDO-A interceptor at the intersection of Ina and Oldfather Roads.

CDO-T3 is 12,031 feet long and is divided into three segments. CDO T-3 Segment 1 begins at the intersection of Oasis Road and Shannon Road and heads south on Shannon Road and then proceeds west through a subdivision along Canyon Break Trail. It then runs south through a wash across Sumter Drive and heads west just north of Linda Vista Boulevard and drains into the CDO-T-2 on Thornydale Road. Segment 2 begins just northeast of Cortaro Farms Road on Club Drive, then heads west along Cortaro Farms Road and drains into the CDO-T2 on Thornydale Road. Segment 3 begins on Oldfather Road, near the cross road of Barque Drive, then runs south on Oldfather Road and drains into the CDO T2 on Orangewood Drive.

CDO-T4 is begins at the intersection of Tangerine Road and Camino de Oeste and then proceeds south for 30,146 feet to drain into the CDO-A interceptor at the intersection of Ina Road and Camino de Oeste.

CDO-T5 is 3,224 feet long and begins in a drainageway west of Crimson Vista Drive and north of Pinnacle Vista Drive in the Dove Mountain community. The line then runs south through native desert and ends at Pump Station 8B6515 located at 5540 West Tangerine Road, north of Tangerine Road and west of Dove Mountain Boulevard.

CDO-T6 is 13,239 feet long and is divided into two segments. Segment 1 begins in a drainageway east of Paseo Montalban, north of Ina Road, and then runs west along Ina Road to drain into the CDO-A interceptor west of the CDO Wash on Ina Road. Segment 2 starts on La Cholla Boulevard near the cross street of Zarragoza Drive and heads south on La Cholla Boulevard. It drains into the CDO-T6 Segment 1 on Ina Road.

CDO-T7 is 8,612 feet long and begins at the intersection of Northern Avenue and Hardy Road, then heads in the west and southwesterly direction through the Ranchos de La Cañada subdivision and drains into a 12-inch line flowing west on La Cañada Drive and Emerine Drive. Flow from CDO-T7 eventually ends up in the CDO-A interceptor through 10 and 8-inch diameter lines which were not scheduled for assessment in the scope of this project. A summary of CCTV inspected interceptor and trunk piping lengths based on pipe diameters is presented below:

Diameter	15”	16”	18”	20”	21”	24”	30”	33”	36”	48”	Total
Length (ft)	77,095	1,464	18,885	270	26,732	19,199	18,728	1,828	11,160	11,860	187,211

Along the CDO and CDO trunk alignments there are four different types of piping materials that were used for construction. The predominant material is PVC pipe as well as to DIP, VCP, and unlined RCP. The table presented below details the total CCTV inspected length of interceptor and trunks for each type of pipe material:

Pipe Material	PVC	DIP w/unknown liner	VCP	RCP	Total
Length (ft)	74,711	42,279	61,800	8,431	187,221

A condition assessment was performed and in general the interceptor is considered Grade 2. A small portion of DIP is Grade 3 (Fair) or Grade 4 (Poor) at a few reaches, requiring future spot repairs. The estimated cost for spot repairs for Grade 4 is $1.12 million and for future rehabilitation of 7,953 linear feet of interceptor considered Grade 3 is $3.1 million.

North Rillito Interceptor

The North Rillito Interceptor (NRI) was collectively designed and constructed in the time period of 1967-1972. The driving factor in the interceptor development was two-fold: increased population growth in the North and Northeast portions of Tucson along with the design and construction of the new Ina Road WPCF. The Ina Road WPCF started construction in 1975 and was completed in 1977 with an initial capacity of 25 MGD.

The NRI conveys wastewater from the northern Metropolitan and Foothills area to the Ina Road WPCF. It was designed and constructed in phases under the name “North Rillito Interceptor Sewer” Contracts: 61 (Phase A, B, C & D) 68, 69 (Phase 1 & 2), 70, 71, 72 and 73. Along with the NRI, two trunks were added to the CCTV inspection project: the Ventana trunk (18-inch constructed circa 1980-90) and the Sabino trunk (15-inch constructed circa 1988).

The NRI has one siphon (Sabino Creek) and the Sabino Trunk has two siphons (Bear Creek and Cloud Road). All three siphons were cleaned and televised as part of this project. One augmentation project was completed on the Sabino Trunk; twin parallel 15-inch lines compose one portion of the trunk to the NRI.

In 1985, a project was issued to repair portions of the NRI along with restoring bank protection. Flood damage from the floods of 1983 caused the NRI replacements along the banks of the Tanque Verde Wash. In 1987, the NRI was modified to accommodate the new Orange Grove/Southern Pacific Railroad grade interchange. A series of growth spurred by off site development in the 1990s added portions of sewer to the Ventana and Sabino trunks.

North Rillito Interceptor CCTV and Condition Assessment Summary

The NRI flows east to west from the intersection of Tanque Verde Loop Road and Conestoga Avenue to the Ina Road WPCF headworks (see Figure 4.1.6). The NRI and associated trunks are 140,371 feet long and follows the alignment of the Rillito River and Tanque Verde Creek. The NRI is fed by two trunk lines along its alignment. The NRI-Sabino trunk is first along the NRI alignment. The NRI-Sabino trunk is 8,905 feet long and flows from north to south along Sabino Canyon Road alignment. The second trunk, NRI-Ventana, is 15,807 feet long and flows from north to south from the Ventana Resort area along the Sunrise and Kolb Road alignments. A summary of the NRI and trunk pipeline lengths and diameters is presented here.

Diameter (inches)	Length (ft)
15	33,231
18	14,057
21	4,775
24	594
27	7,501
30	11,342
33	13,341
36	19,274
39	23,551
42	10,540
48	2,165
Total	140,371

Along the NRI alignment there are seven different types of piping systems that were used for construction. A total of 30,263 feet of the interceptor is comprised of VCP), 11,234 feet is PVC pipe, 570 feet is DIP lined, 58,141 feet is RCP lined with T-Lock liner, 21,818 feet is unlined RCP, 15,248 is asbestos concrete pipe (ACP), and 3,097 is acrylonitrile butadiene styrene (ABS) Truss pipe. The table presented below outlines the pipe materials and their associated lengths.

Pipe Material	VCP	PVC	DIP	RCP Lined	RCP	ACP	ABS	Total
Length (ft)	30,263	11,234	570	58,141	21,818	15,248	3,097	140,371

Based upon the CCTV investigation and condition assessment, it was determined that the NRI Sabino and Ventana trunk sewers are Grade 2 (Good) and the remainder is considered Grade 3 (Fair) requiring monitoring and CCTV re-inspection in 2008. The estimated cost for future rehabilitation of 115,659 linear feet of interceptor considered Grade 3 is $29.8 million.

Northwest Outfall Interceptor

The NWO Interceptor was constructed in the mid-1960s utilizing mostly unlined 42 to 48-inch diameter reinforced concrete pipe. The interceptor extends approximately 5.0 miles from downtown Tucson north through several neighborhoods to the Roger Road WWTP (see Figure 4.1.7). The interceptor has two double-barrel siphon crossings of the Santa Cruz River. On September 7, 2002, two large sinkholes opened west of Interstate 10 in the middle of West Speedway Boulevard. A major sanitary sewer overflow (SSO) occurred that entered the Santa Cruz River through the storm drain system. The NWO emergency was the largest ever experienced by PCWMD and prompted rapid reassessment of PCWMD's construction project priorities. A small portion of the 35-year-old interceptor had been rehabilitated 5 years earlier and a design was in progress to rehabilitate the remaining segments of the interceptor. As a result of the emergency and the likely damage to segments of the interceptor downstream of the sinkholes, an emergency rehabilitation design and construction project utilizing CIPP technology was initiated for the entire alignment.

The rehabilitation project also included cleaning of two double-barrel siphons (Alameda and Sweetwater) and rehabilitation of the inlet and outlet siphon structures, as well as rehabilitating all manholes along the five mile alignment. As a result, the entire interceptor including the two siphon structures are considered Grade 2 (Good).

Old Nogales Highway Interceptor

This sewer is not recognized as an interceptor, but as a trunk sewer to the SEI. The line was constructed in 1968 with two additional phases constructed in 1974 and 1987. Because of the length and pipe diameter involved, the Old Nogales Highway (ONH) trunk sewer has been identified as an interceptor.

The limits of the trunk sewer extend from I-10 and Park Avenue to the Hughes Access Road, along the Old Nogales Highway alignment. One trunk was added to this group, which is the 15-inch diameter sewer along Irvington Road. The ONH trunk sewer has one siphon, known as the Veteran's siphon. The siphon is located due north of Ajo Way, near the Union Pacific Railroad. It contains three barrels (8-inch, 15-inch and 18-inch) and was constructed in 1968.

Old Nogales Highway Interceptor CCTV and Condition Assessment Summary

The ONH Interceptor system is approximately 41,000 feet long including 7,800 feet of trunk line that discharges into the main interceptor (see Figure 4.1.8). The ONH interceptor flows from south to north along the east side of Nogales Highway in an easement within the Union Pacific Railroad track right-of-way. The interceptor begins 550-feet east of the intersection of Hughes Access Road and the Nogales Highway and proceeds north to near the intersection of Park Avenue and I-10. The ONH-T begins at the intersection of Irvington Road and Benson Highway and proceeds west for 7,800-feet to a point of discharge into the ONH interceptor at 1st Avenue. A summary of interceptor and trunk pipe lengths and diameters is presented below:

Diameter	15"	18"	24"	30"	Total
Length (ft)	7,619	26,218	6,756	658	41,251

Along the ONH interceptor alignment there are two different pipe materials that were used for the construction, DIP and VCP. The table below shows the total CCTV inspected lengths of each pipe material.

Pipe Material	DIP	VCP	Total
Length (ft)	26,059	15,192	41,251

During CCTV inspection activities, it was found that the epoxy liner applied to the interior of the DIP is separating itself from the pipe at most joints and in some locations obstructing flow as well as impeding CCTV inspection. Based upon the CCTV inspection investigation and condition assessment, it was determined that the entire ductile iron portion is Grade 4 (Poor) requiring rehabilitation. The remainder is considered Grade 3 (Fair) requiring monitoring and CCTV re-inspection in 2008. The estimated cost for rehabilitation of 26,059 linear feet of interceptor considered Grade 4 and 15,192 linear feet of interceptor considered Grade 3 are $8.4 million and $3.9 million, respectively.

Pantano Interceptor

The Pantano Interceptor (PTI) was originally installed in 1975 under the plan name: City of Tucson Sewer Improvements Contract 281, Pantano Interceptor Sewer, Stage 1. When constructed in 1975, the line ranged in size from 36, 33 to 24-inches using predominantly VCP construction. The larger lines (33-inch and 36-inch) were RCP that was 300-degree protected with PVC lining. The interceptor was extended from Speedway to Golf Links Road, paralleling the Pantano Wash in 1991. Trunk lines were constructed in 1979 (21-inch Craycroft Road trunk sewer) and in 1989 (18-inch trunk line at Sarnoff Drive). The interceptor was again extended to its current limit of Irvington Road.

Wastewater generated in the Pantano Wash drainage basin is currently conveyed in the Pantano Interceptor to the South Rillito Interceptor (SRI) system at Craycroft Road. Flow can be re-directed at Craycroft Road into the NRI, but normally this crossing is not in use. This feature is listed as an inverted siphon in Craycroft Road, located at the Pantano Wash/Tanque Verde Creek confluence. The siphon does not have multiple barrels and identified inlet and outlet chambers similar to other inverted siphons located in the collection system.

Pantano Interceptor CCTV and Condition Assessment Summary

The total PTI system with interceptor and trunks is 102,048 feet long (see Figure 4.1.9). The PTI is approximately 63,582 feet long and flows from the southeast to the northwest. PTI begins just southeast of the intersection of Houghton and Irvington Roads in the Civano Subdivision and ends just north of the intersection of Craycroft Road and Sutler Lane where it empties into the North Rillito Interceptor. There are five trunks that feed into the PTI. Beginning on the south side of PTI, the first trunk is PTI-T2. The PTI-T2 trunk is 2,581 feet long and begins at the intersection of Irvington and Harrison Roads and proceeds north to empty into PTI at the intersection of Audrey and Millmar Roads. The second trunk from south to north is PTI-T1. PTI-T1 is 8,525 feet long and begins just south of the intersection of Escalante Road and Sarnoff Drive in Lincoln Park. The PTI-T1 trunk proceeds north from Lincoln Park to tie-into PTI at the intersection of Pantano Parkway and Hazeltine Lane. The third PTI trunk from south to north along PTI is PTI-T4. PTI-T4 is 16,918 feet long and runs along the east side of the Pantano Wash from the intersection of Hazeltine Lane and Pantano Parkway to just southeast of the intersection of Speedway Boulevard and Finance Center Drive. The fourth trunk line is PTI-T3. PTI-T3 is 2,360 feet long and begins at the intersection of Gateway Center Circle and Rosewood Street and empties into PTI at Speedway Boulevard and Finance Center Drive in the west side of Pantano Wash. The fifth trunk line reporting to PTI is PTI-Craycroft. PTI-Craycroft begins at the intersection of Craycroft Road and Speedway Boulevard and proceeds north for 8,082 feet in the Craycroft Road alignment to its termination point where it empties into PTI at the intersection of Craycroft Road and Glenn Street.

A summary of interceptor and trunk piping lengths and diameters is presented below:

Diameter	12”	15”	16”	18”	21”	24”	30”	33”	36”	Total
Length (ft)	2,804	23,920	231	29,934	7,973	4,872	12,598	10,197	9,519	102,048

Along the PTI and PTI trunk alignments there are four different types of piping materials that were used for construction. The predominant material is PVC in addition to runs of DIP, VCP, RCP with T Lock lining, and ACP. The table presented below details the total CCTV inspected length of interceptor and trunks with material and length for each type of pipe.

Pipe Material	PVC	DIP	VCP	RCP Lined	ACP	Total
Length (ft)	37,589	18,632	16,357	17,321	12,149	102,048

Based upon the CCTV investigation and condition assessment, PTI-T1 and T2 and the southeast extension from Houghton Road were determined to be Grade 2 (Good). The remainder is considered Grade 3 (Fair) requiring monitoring and CCTV inspection in 2008. In addition, 4 sections (924 feet) of DIP were deemed Grade 4 (Poor) requiring rehabilitation. The estimated cost for spot repairs on Grade 4 is $450,000 and for future rehabilitation of interceptor considered Grade 3 is $19.1 million.

Santa Cruz Central Interceptor

The Santa Cruz Central (SCC) Interceptor was originally constructed in 1950 for Pima County Sanitary District 1. The limits of the interceptor extend approximately from downtown Tucson

(Congress Street and I-10) to Prince Road and I-10. The interceptor parallels the Santa Cruz River and the Santa Cruz East interceptor and ranges from 24-inches to 42-inches in diameter. The interceptor was originally built with unlined RCP. The interceptor is further distinguished by the use of rectangular manholes and covers along the alignment. An abandoned Parshall flume used for flow monitoring was located just upstream of Fort Lowell Road on the alignment. Two lift stations discharge into this line via force mains.

Recent modifications to the line include ADOT improvements to downtown Tucson (1999), which included a pipe material change to T-Lock, lined RCP extending from Saint Mary's Road to Speedway Boulevard. A segment of unlined RCP was located downtown, on the first reach south of Saint Mary's Road. From this segment upstream to the Alameda siphon, the pipe has been replaced. At Grant Road the interceptor was moved to the west (two portions cross the freeway) to accommodate the Grant Road / I-10 freeway crossing in 1961. The line in the Grant Road / I-10 freeway crossing was again replaced in 1995 to accommodate more freeway construction.

Santa Cruz Central Interceptor CCTV and Condition Assessment Summary

The SCC Interceptor is 22,456 feet long and flows from south to north along the I-10 alignment (see Figure 4.1.10). The SCC interceptor piping consists of multiple diameter and material types. The CCTV inspection program identified multiple diameters of unlined RCP lengths that require immediate and near term attention. A summary of the SCC interceptor pipeline lengths and diameters is presented below:

Diameter	24"	27"	30"	39"	42"	Total
Length (ft)	2,113	3,948	10,701	813	4,881	22,456

Along the SCC interceptor alignment there are five different pipe materials that were used for the construction. A total of 11,162 feet of the interceptor is comprised of unlined RCP, 5,877 feet of lined RCP, 4,410 feet of PVC, 879 feet of DIP and 150 feet of steel pipe. The table presented below outlines the pipe materials and their associated lengths.

Pipe Material	RCP Unlined	T-Lock	Steel	DIP	PVC	Total
Length (ft)	11,140	5,877	150	879	4,410	22,456

Upon completion of interceptor CCTV and condition assessment, it was determined that 1,331 feet of unlined RCP was Grade 5 (requires immediate attention) and as a result was replaced in 2004. Additionally, 1,108 feet of unlined RCP is Grade 4 (Poor), which requires attention within five years; 6,897 feet of unlined RCP is Grade 3 (Fair), and the remainder is Grade 2 (Good). In addition to the unlined RCP that was assessed as Grade 5, there was 150 feet of steel pipe inspected that is severely tuberculated. This section of steel pipe was found below Miracle Mile and I-10 and was rehabilitated in 2004. The estimated cost for rehabilitation of 1,108 linear feet of interceptor considered Grade 4 and 9,580 linear feet of interceptor considered Grade 3 are $288,000 and $2.5 million, respectively.

Santa Cruz East Interceptor

The Santa Cruz East (SCE) Interceptor was originally constructed in 1916. The limits of the interceptor extend approximately from Downtown Tucson (Saint Mary's Road) to the Fort Lowell Road alignment. The interceptor parallels the Santa Cruz River and the Santa Cruz Central interceptor east of I-10. The 30-inch diameter concrete gravity main was then extended across the Santa Cruz at Fort Lowell Road to allow the western 90 acres of a farm to be irrigated with sewage in 1917.

Recent modifications to the line include realignment at Grant Road (1974), additional manholes added to the interceptor (1974) and ADOT improvements downtown Tucson (1999). The recent improvements included a pipe material change to T-Lock lined RCP. The interceptor from north of Speedway Boulevard to the Fort Lowell Road alignment has remained intact and is the original unlined RCP dating from the original date of construction in 1916.

Santa Cruz East CCTV and Condition Assessment Summary

The SCE interceptor is approximately 16,000 feet long and is constructed with 30 to 33-inch diameter piping and has a north/south alignment along the east side of I-10 (see Figure 4.1.11). The SCE interceptor starts at the intersection of Davis Street and Anita Avenue, and proceeds north to Fort Lowell Road and the Union Pacific Railroad, manhole 9914 09. In addition to the main interceptor there are two very short lateral connections to the SCC that were inspected and assessed under this project.

Along the SCE interceptor alignment there are three types of piping material used, with unlined reinforced concrete pipe being the predominant material in use. There are 12,048 feet of unlined RCP; 363-feet of CIPP lined RCP, 1,510-feet of T-lock-lined RCP and 1,629-feet of VCP.

The table below summarizes the material types and quantities:

Pipe Material	RCP	T-Lock	CIPP	VCP	Total
Length (ft)	12,048	1,510	363	1,629	15,550

Of the 12,048 feet of unlined RCP assessed there are 2,111 feet that were rated Grade 4 (Poor) and require attention within three years, and 8,057 feet that were rated Grade 3 (Fair) requiring monitoring and CCTV re-inspection in 2008. The estimated cost for rehabilitation of 2,111 linear feet of interceptor considered Grade 4 and 8,057 linear feet of interceptor considered Grade 3 are $541,000 and $2.1 million, respectively.

Santa Cruz Interceptor

The Santa Cruz Interceptor (SCI) was originally installed in 1954, under the plan name: Sanitary District No. 1, Santa Cruz Interceptor and A1, A2, A3, A4, A5, A6 Trunks. The interceptor was predominantly constructed of VCP, with shallow wash crossings encased in concrete. In 1962, the interceptor was modified to include a three-barrel siphon (15-inch, 18-inch, 21-inch) at the Julian Wash crossing. All pipe used in the construction of the siphon was VCP. The next significant modification occurred in 1963 with the construction of the new Nogales – Tucson Highway I-19. A portion of the 21-inch VCP was relocated to accommodate freeway construction. The replacement pipe material was VCP.

In 1985, additional work to I-19 at Irvington was done requiring sewer relocations. The work involved replacement of sewer with new ductile iron pipe, along with VCP. A new freeway sewer crossing was added in which 20-inch DIP was installed in a 36-inch steel casing. In 1995 ADOT work related to I-19 relocated and replaced portions of the 30-inch SCI and 21-inch SCI-B from downtown to Star Pass Boulevard. Very recent (2002) sewer relocation and replacement was noted at the most southern portion of SCI-B to accommodate the new I-19/I-10 traffic interchange.

Santa Cruz Interceptor CCTV and Condition Assessment Summary

The entire SCI system runs from south to north, and is approximately 47,118 feet long (see Figure 4.1.12). The SCI begins at the intersection of South Pinta Avenue and an easement between West Calle Medina and Calle Sevilla then proceeds north for approximately 5,370 feet using 18-inch diameter piping. At that point the interceptor is upsized to 20 and 21-inch diameter piping and

proceeds north for approximately 12,300 feet. At the intersection of West Ebner Place and South Lamar Avenue the interceptor increases in size to 24-inch diameter piping and proceeds north for 15,598 feet crossing Interstate 19 (I-19) twice before increasing to 30-inches on the west side of I-19. After crossing underneath I-19, but prior to increasing to 30-inches in diameter, the line crosses underneath the Julian Wash by means of the Julian Wash Siphon. The 30-inch line then proceeds north for approximately 13,850 feet before terminating at the Alameda Street siphon, on the east side of the Santa Cruz River and West Alameda Street.

The SCI-T trunk begins at the intersection of South 12th Avenue and West 40th Street as a 15-inch line. The line heads west for approximately 380 feet, decreases to 12-inches in diameter for another 370 feet, then increases to 15-inches for the final 630 feet prior to connecting to the SCI interceptor just west of the intersection of 40th Street and 16th Avenue.

The following table details diameters and lengths along the interceptor:

Diameter	15”	18”	20”	21”	24”	30”	Total
Length (ft)	1,885	8,245	458	15,893	6,432	14,205	22,456

The SCI interceptor is a combination of VCP, reinforced concrete lined CIPP, PVC and DIP. There is 39,270 feet of VCP, 6,860 feet of PVC, and 988 feet of DIP. A brief table showing the pipe material length breakdown is shown below.

Pipe Material	VCP	DIP	PVC	Total
Length (ft)	39,270	988	6,860	47,118

During the review of the CCTV logs and still photos by Brown and Caldwell some major defects along the interceptor were observed; the CCTV crew also encountered some sections of pipe with debris and structural damage. Based on the CCTV inspection and condition assessment, SCI-T is Grade 2 (Good) and the DIP (998 feet) is considered Grade 4 (Poor) requiring rehabilitation within one year. The remainder is Grade 3 (Fair) requiring monitoring and CCTV re-inspection in 2008. The estimated cost for spot repairs on Grade 4 is $541,000 and for future rehabilitation of 37,527 linear feet of interceptor considered Grade 3 is $9.1 million.

Southeast Interceptor

The Southeast Interceptor (SEI) conveys wastewater generated in the southeast portion of the Metropolitan Tucson Area to the downtown area. The SEI interceptor starts southeast of the Rita Ranch developed area and parallels I-10 to the downtown area. The interceptor consists of over 10 miles of sewer line, with RCP with a plastic liner as the predominant material of construction. A majority of the interceptor is 21-inches to 30-inches in diameter and was installed in the early to mid-1980s. The final phases of the interceptor were completed in 1986. The earliest date of construction for some of the downtown portions is 1927.

Southeast Interceptor CCTV and Condition Assessment Summary

The SEI inspected area is divided into three sections: SEI A, SEI B and SEI-C (see Figure 4.1.13). In addition, there are three trunk lines feeding the SEI from east to west: SEI Rita Ranch, SEI Country Club, and SEI-Downtown.

The first segment of the interceptor from east to west is SEI-A. The SEI-A segment of the interceptor is 25,969 feet long and begins at the intersection of Old Vail Road and the east-west Rita Ranch drainage way and ends 400 feet north of the intersection of Craycroft and Littletown Roads. The interceptor is constructed with a combination of cold tar epoxy coated DIP and T lock lined RCP. The second segment of the SEI is SEI-B. The SEI-B segment of the interceptor begins

at the intersection of Craycroft and Littletown Roads and proceeds west along the I-10 alignment for 34,525 feet to its termination point into SEI-C at the intersection of I-10 and Benson Highway. The final segment of the SEI is SEI-C. SEI-C begins at the intersection of I-10 and Benson Highway and proceeds west for 4,100 feet to its termination point into the Alameda Siphon. A summary of pipe lengths, diameters and constructed materials is presented in the following table:

4.1.2 Inspection Summary - SEI A/B/C

SEI-A					
Inspected Diameter (inches)	27	30	36	48	Total
Inspected Lenght (feet)	6,607	15,590	2,177	1,595	25,969
Pipe Material	DIP w/Cold Tar Epoxy		RCP w/T-Lock		Total
Length (feet)	229		25,740		25,969
SEI-B					
Inspected Diameter (inches)	30		36		Total
Inspected Length (feet)	19,169		15,356		34,525
Pipe Material	DIP w/Cold Tar Epoxy		RCP w/T-Lock		Total
Lenght (feet)	1,727		32,798		34,525
SEI-C					
Inspected Diameter (inches)	30		36		Total
Inspected Length (feet)	4,100		600		4,700
Pipe Material	DIP w/Cold Tar Epoxy		RCP w/T-Lock		Total
Length (feet)	4,100		600		4,700

The first trunk line from east to west is SEI-Rita Ranch. This line is approximately 33,950 feet long and is constructed with a combination of lined DIP, PVC and T-lock lined RCP. The SEI Rita Ranch trunk line flows to the SEI-A section of the SEI at two locations along the Rita Ranch drainage way east of Old Vail Road. The second trunk line is the SEI Country Club trunk which reports to the SEI-B section of the interceptor. The SEI-Country Club trunk is approximately 15,091 feet long and is constructed with PVC piping. The SEI Country Club trunk line flows from north to south and discharges to the SEI-B section of the SEI 100 feet south of the intersection of Country Club and Irvington Roads. The third and final trunk line reporting to the SEI is SEI-Downtown. The SEI-Downtown trunk is divided into four separate lines that discharge to the SEI-C section of the SEI. The SEI-Downtown trunk flows to the SEI-C segment of the SEI at the intersections of: the Campbell Avenue on-ramp to I-10; Euclid Avenue and 36th Street; Euclid Avenue and 25th Street; and, Main Avenue and 36th Street. The total length for all four sections of the SEI Downtown trunk is 22,110 feet and the trunk is constructed with VCP, PVC, lined DIP and non-reinforced concrete pipe. A summary of pipe lengths, diameters, and constructed materials is presented in the table below for the listed trunk lines:

4.1.3 Inspection Summary - SEI Rita Ranch, Country Club and Downtown

SEI-Rita Ranch					
Inspected Diameter (inches)	18	21	24	30	Total
Inspected Length (feet)	26,214	3,831	2,607	1,298	33,950
Pipe Material	DIP	DIP w/Cold Tar Epoxy	PVC	RCP w/T-Lock	Total
Length (feet)	8,827	13,892	9,933	1,298	33,950
SEI-Country Club					
Inspected Diameter (inches)	15	18	21	24	Total
Inspected Length (feet)	2,606	5,567	2,826	4,092	15,091
Pipe Material	VCP				Total
Lenght (feet)	15,091				15,091
SEI-Downtown					
Inspected Diameter (inches)	12	15	16		Total
Inspected Length (feet)	1,003	20,991	16		22,110
Pipe Material	VCP	PVC	DIP	CP, Non-Reinforced	Total
Length (feet)	21,367	479	116	148	22,110

Review of the CCTV video reveals that all of the RCP installed in the SEI is lined and in fair condition (Grade 3). However, there are numerous reaches of DIP with failing liners requiring rehabilitation. In addition, it was noted that over 100 manholes along the SEI and trunks have a high level of corrosion and should be scheduled for rehabilitation. The estimated cost for spot repairs on Grade 4 is $920,000 and for rehabilitation of 140,000 linear feet of interceptor considered Grade 3 is $39.1 million.

South Rillito Roger Road Interceptor

The South Rillito Roger Road (SRRR) Interceptor was originally installed in 1965 under the plan name; Roger Road Interceptor. The interceptor parallels the Roger Road alignment and is part of the South Rillito Interceptor system that conveys wastewater from the mid-town (Tucson Boulevard) area to the Roger Road WWTP. The interceptor was predominantly composed of unlined RCP and ranged from 30 to 33-inches in size until it was rehabilitated in 1998 with CIPP.

In 1975, the interceptor was connected from Roger Road to Prince Road via an alignment along Romero Road with 30-inch VCP. The next modification to the interceptor occurred in 1997 with the completion of a new flow management structure at the intersection of Roger Road and Tyndall Avenue. This flow management structure was added with the construction of a new 66-inch parallel interceptor (South Rillito West Central [SRWC]) in Roger Road. This unique structure allows the 66-inch line to go under the 30-inch line and continue south on Tyndall Avenue. The portion of the SRRR interceptor over the 66 inch line is a 24-inch DIP reach with a controlling gate valve. There is also another 24-inch DIP reach with a gate valve which allows flows south into the 66-inch line.

A one-foot hydraulic jump was encountered and documented in the CCTV survey and as-builts confirm the installation of the jump to clear the top of the 66-inch SRWC Interceptor.

South Rillito Roger Road Interceptor CCTV and Condition Assessment Summary

The SRRR Interceptor system is approximately 24,975 feet long (see Figure 4.1.14). The SRRR Interceptor begins at the intersection of Tucson Boulevard and Allen Road. From that point the line runs north for approximately 1,334 feet, using VCP to Roger Road where the sewer line turns and heads west for 16-feet using 8-inch diameter PVC piping. At that point the interceptor is upsized to 30-inch diameter RCP/CIPP and continues west along Roger Road approximately 10,312 feet to Stone Avenue, where the line is upsized again to 33-inch diameter VCP. The 33 inch diameter VCP interceptor continues west along Roger Road for 7,926 feet to the intersection of Roger and Flowing Wells Roads. At Roger and Flowing Wells Roads the interceptor decreases to 30-inch diameter VCP piping and continues to its completion at the intersection of Romero and Prince Roads; a distance of approximately 5,387 feet. Pipe diameter lengths are shown in the table below:

Diameter	8”	15”	24”	30”	33”	Total
Length (ft)	16	1,334	59	15,040	7,926	24,975

The SRRR interceptor is a combination of VCP, RCP/ CIPP, DIP, and a short section of PVC piping. There are 4,012 feet of VCP, 20,947 feet of CIPP, and 16 feet of PVC. A brief table showing the pipe material length breakdown is shown below.

Pipe Material	VCP	CIPP	DIP	PVC	Total
Length (ft)	4,012	20,888	59	16	24,975

Review of the CCTV video reveals that all of the RCP installed in this interceptor has been rehabilitated using the CIPP method. The entire interceptor is rated Grade 2 (Good), except for the ductile iron pipe which is Grade 4 (Poor) requiring rehabilitation. The estimated cost for spot repairs on Grade 4 is $23,000.

South Rillito West Central Interceptor

The downstream portions of the South Rillito West Central (SRWC) Interceptor were constructed in 1975 with the Prince Road Interceptor project. Within that project a small section of 48-inch (originally constructed in 1950) was abandoned. The SRWC Interceptor is part of the larger South Rillito interceptor system. When comparing original dates of construction with other similar sized interceptors (including those in the South Rillito system) the SRWC has the most recent date of construction.

After the downstream section was constructed in 1975 (upgraded in size and pipe material), the next improvement to the South Rillito system was the extension east of the interceptor from Tucson Boulevard to Columbus Boulevard in 1980. In 1983, the interceptor was again extended east from Columbus Boulevard to the Belvedere alignment and then in 1990 the last extension east, Belvedere to Craycroft Road, was constructed. In 1985, a major street improvement to Stone Avenue was conducted and a 24-inch north/south trunk to the South Rillito interceptor system was added. SRWC-T Stone is the nomenclature used to describe this trunk and it is included within this interceptor grouping.

In the 1990s a series of three improvements were done to the South Rillito interceptor system which provided the inception of a third leg (SRWC) of the South Rillito system. It added capacity by adding a 66-inch line from the Tucson Boulevard flow management structure to the Prince Road/I-10 interchange. Also included with the segmented improvements was the reconstruction of the Tucson Boulevard flow management structure itself.

South Rillito West Central Interceptor CCTV and Condition Assessment Summary

The SRWC Interceptor flows east to west from Craycroft Road to the Roger Road WWTP headworks (see Figure 4.1.15). The interceptor is 53,825 feet long and follows the alignment of the Rillito River. The SRWC Interceptor is fed by three trunk lines along its alignment. The SRWC-Rosemont is the first trunk along the SRWC alignment. The SRWC-Rosemont trunk is 27,534 feet long and flows from south to north along Rosemont Boulevard, beginning at the intersection of Broadway Boulevard and Craycroft Road and terminating into the SRWC interceptor at the intersection of Columbus Boulevard and Bullrush Lane. The second trunk, SRWC-Columbus, is 13,050 feet long and flows from south to north, beginning at the intersection of Columbus Boulevard and Fourth Street and terminating into the SRWC interceptor at Columbus Boulevard and Bullrush Lane. The Columbus and Rosemont trunks run parallel along Columbus Boulevard from Glenn Street to their termination points at Bullrush Lane. The third trunk line feeding the SRWC interceptor is the SRWC-Stone trunk. The SRWC Stone trunk is 4,011 feet long and flows from south to north along Stone Avenue, beginning at the intersection of Stone Avenue and Fort Lowell Road and terminating into the SRWC interceptor at the intersection of Stone Avenue and Pastime Road. A summary of the SRWC interceptor and trunk pipeline lengths and diameters is presented below:

Pipe Material	VCP	PVC	DIP	RCP Lined	RCP	Total
Length (ft)	37,188	6,292	1,769	19,585	33,586	98,420

Along the SRWC interceptor alignment there are five different pipe materials that were used for construction. A total of 37,188 feet of the interceptor is comprised of VCP, 6,292 feet is PVC pipe, 428 feet is DIP lined, 34,922 feet is RCP lined with T-Lock liner and 19,590 feet is unlined RCP that has been rehabilitated with CIPP lining. The table presented below outlines the pipe materials and their associated lengths.

Diameter	15”	18”	21”	24”	48”	54’	66”	72”	78”	Total
Length (ft)	16,030	19,396	8,469	1,293	14,322	16,026	21,221	132	1,531	98,420

Based upon the CCTV investigation and condition assessment, it was determined that the interceptor is mostly Grade 2 (Good) with the remainder Grade 3 (Fair) requiring monitoring and CCTV investigation/condition assessment in 2008. The estimated cost for spot repairs on Grade 4 is $130,000 and for future rehabilitation of 21,422 linear feet of interceptor considered Grade 3 is $5.4 million.

South Rillito West North Interceptor

The downstream portion of the South Rillito West North (SRWN) Interceptor was constructed in 1950 under the Prince Road (PR) Interceptor project. This segment was on Prince Road, extending to Romero Road. The interceptor is part of the larger South Rillito Interceptor system that conveys wastewater from the mid-town (Tucson Boulevard) area to the Roger Road WWTP.

In 1995, a portion of the interceptor was rehabilitated utilizing cure-in-place technology. The project was titled “Romero Road/Wetmore Road Sewer Rehabilitation.” The line was rehabilitated from Prince/Romero to Wetmore/Oracle Roads.

South Rillito West North Interceptor CCTV and Condition Assessment Summary

The SRWN Interceptor flows east to west from the intersection of Campbell Avenue and Roger Road to Prince Road and I-10 for approximately 28,700 feet (see Figure 4.1.16).

The interceptor begins as an 18-inch diameter line at the intersection of Campbell Avenue and Roger Road and runs 1,530 feet north along Campbell Avenue to Limberlost Road where it turns

and travels west for 5,090 feet to First Avenue. At First Avenue, the line travels north for 1,203 feet to Wetmore Road. At Wetmore Road, the SRWN increases in diameter from 18-inches to 24 inches for 104 feet, then decreases to 21-inches at Wetmore Road. The interceptor travels west along Wetmore Road for approximately 5,124 feet before increasing diameter once more to 24 inches, just prior to Oracle Road. The line continues at a diameter of 24-inches for 4,656 feet to just before Flowing Wells Road, where the line increases to 30-inches diameter. The line continues for 3,169 feet to Romero Road, where it turns south along Romero Road for 5,267 feet to Prince Road. At Romero Road and Prince Road the 30 inch diameter line turns west for approximately 2,089 feet until discharging into the SCE 54 inch interceptor at Prince Road and Interstate 10. A summary of the SRWN interceptor and trunk pipeline lengths and diameters that have been inspected is presented below:

Diameter	18”	21”	24”	30”	Total
Length (ft)	8,055	5,157	4,882	9,574	27,668

Along the SRWN interceptor alignment there are five different pipe materials that were used for construction. A total of 11,890 feet of the interceptor is comprised of VCP, 7 feet is PVC pipe, 104 feet is lined DIP, 12 feet is RCP with T-lock liner and 14,226 feet is CIPP-lined RCP. An outline of the inspected pipe materials and their associated lengths is presented below:

Pipe Material	VCP	PVC	DIP	RCP w/T-Lock	CIPP	Total
Length (ft)	13,199	7	104	12	14,346	27,668

Based upon the CCTV investigation and condition assessment, it was determined that the interceptor is mostly Grade 2 (Good) with the remainder Grade 3 (Fair) requiring monitoring and CCTV investigation/condition assessment in 2008. The estimated cost for spot repairs on Grade 4 is $74,000 and for future rehabilitation of 13,200 linear feet of interceptor considered Grade 3 is $3.6 million.

South Rillito West South Interceptor

The South Rillito West-South (SRWS) interceptor was originally constructed in 1950. The SRWS Interceptor begins at the intersection of Alvernon Way and Glenn Street and proceeds west for 3,200 feet with 18-inch diameter piping. The interceptor then changes to 21-inches diameter piping for 11,700 feet as it proceeds west on Glenn Street, then turns north onto Tucson Boulevard and goes west again on Hedrick Street. At the intersection of Hedrick Street and Mountain Avenue the interceptor diameter changes from 21 inches to 24 inches and proceeds north to Prince Road then west on Prince Road for 6,000 feet. At that point the interceptor is upsized again to 27 inches and proceeds west for the final 13,300 feet to where the interceptor ends at Prince Road and Romero Road.

This line was originally named the Prince Road (PR) Interceptor and constructed for Sanitary District 1. The line was originally constructed of unlined reinforced concrete pipe from Prince Road and Romero Road roughly to the intersection of Campbell Avenue and Hedrick Street. On the east side of Campbell to the end of the interceptor surveyed vitrified clay pipe was used as the pipe material.

The next significant event to happen to this interceptor was the emergency repair after a pipe collapse in 1990 at the intersection of Prince Road and Oracle Road. The 27-inch diameter unlined RCP was replaced with 24-inch diameter PVC (C-900) for two reaches (9813-21 to 9813-22 to

9813-23). After this event the rest of the interceptor was rehabilitated using CIPP methods. The rehabilitation was broken into 3 segments: Romero Road to Stone Avenue (1992), Prince Road/ Stone Avenue to Hedrick Street (1993) and Mountain Avenue to Campbell Avenue (2000). The interceptor surveyed contained no sections of unlined RCP after the rehabilitation projects were completed.

The SRWS interceptor begins at the intersection of Alvernon Way and Glenn Street and proceeds west for 3,228 feet with 18-inch diameter piping (see Figure 4.1.17). The interceptor then changes to 21-inches diameter piping for 11,771 feet as it proceeds west on Glenn Street, then turns north onto Tucson Boulevard and goes west again on Hedrick Drive. At the intersection of Hedrick Drive and Mountain Avenue the interceptor diameter changes from 21-inches to 24-inches and proceeds north to Prince Road, then west on Prince Road for 5,996 feet. At that point, the interceptor is upsized again to 27-inches and proceeds west for the final 13,250 feet to where the interceptor ends at the intersection of Prince and Romero Roads. Pipe diameter lengths are shown in the table below:

Pipe Material	VCP	CIPP	DIP	PVC	Total
Length (ft)	5,623	27,078	113	1,431	34,245

The SRWS interceptor is a combination of vitrified clay pipe (VCP), reinforced concrete lined cured in place pipe (CIPP), polyvinyl chloride pipe (PVC) and ductile iron pipe (DIP). There is 5,623 feet of VCP, 27,078 feet of CIPP, 1,431 feet of PVC, and 113 feet of DIP. A brief table showing the pipe material length breakdown is shown below:

Diameter	18”	21”	24”	27”	Total
Length (ft)	3,228	11,771	5,996	13,250	34,245

Based upon the CCTV investigation and condition assessment, it was determined that the interceptor is predominately Grade 2 (Good) with the remainder Grade 3 (Fair) requiring monitoring and CCTV investigation/condition assessment in 2008. The estimated cost for future rehabilitation of 10,275 linear feet of interceptor considered Grade 3 is $2.6 million.

South West Interceptor

The South West Interceptor (SWI) was originally installed in 1963, under the plan name “Freedom Homes District Sewer Improvements”. When constructed in 1963, the line was 21 inches in size and was predominantly VCP construction. This line was a trunk connecting to the SCI which crossed the West Branch of the Santa Cruz with a siphon and crossed the Santa Cruz via a small lift station and force main. The Santa Cruz crossing was along the Flowing Wells Cross Cut Road, just south of what now exists as Starr Pass Boulevard. In 1974, the downstream portion of the SWI was constructed under the plan name “Contract 89, 1973 Del Sol Sewerage Project.” The line was 27 inches in size and of VCP construction.

In 1977 the entire interceptor was completed with larger diameter pipe starting at Congress Street and extending south to Valencia Road. Also in 1977, the siphon and lift station were removed from the Santa Cruz trunk and flows were redirected to the SWI. In the early to mid-1980s, additional trunks to the SWI were added to accommodate residential development occurring in the area.

South West Interceptor CCTV and Condition Assessment Summary

The SWI flows south to north from the intersection of Los Reales and Mission Roads to tie into the NWI west of the Alameda Siphon at the intersection of Linda Avenue and Alameda Street (see Figure 4.1.18). The interceptor is 39,032 feet long and follows the alignment of Mission Road.

The SWI is fed by four trunk lines along its alignment. The SWI-T I is the first trunk along the SWI alignment. The SWI-T I is 11,300 feet long and flows from south to north along the Midvale Park Road alignment. The second trunk, SWI-T II is 13,380 feet long and flows from south to north along the Santa Cruz River alignment. The third trunk, SWI-T III, is 5,620 feet long and runs along Los Reales Road and Cardinal Avenue. The fourth trunk line feeding the SWI is the SWI-T IV trunk. The SWI-T IV trunk is 3,326 feet long and flows from west to east along Valencia Road. A summary of the SWI and trunk pipeline lengths and diameters is presented below:

Diameter	18”	21”	24”	27”	30”	33”	Total
Length (ft)	16,472	3,096	9,148	4,591	9,907	11,765	72,674

Along the SWI and trunk system there are four different pipe materials that were used for construction. A total of 39,688 feet of the system is comprised of VCP, 9,305 feet is PVC pipe, 2,009 feet is DIP lined and 21,672 feet is RCP lined with T-Lock liner. The table presented below outlines the pipe materials and their associated lengths is presented below:

Pipe Material	VCP	PVC	DIP	RCP Lined	Total
Length (ft)	39,688	9,305	2,009	21,672	72,674

There are multiple reaches of T-locked RCP piping that have weld failures and holes. This is a common condition in the Pima County system. Based upon the CCTV investigation and condition assessment, it was determined that the interceptor is predominately Grade 3 (Fair) requiring monitoring and CCTV investigation/condition assessment in 2008. Two small reaches are Grade 4 (Poor) requiring immediate attention and the remainder is Grade 2 (Good). The estimated cost for spot repairs on Grade 4 is $396,000 and for future rehabilitation of 50,239 linear feet of interceptor considered Grade 3 is $13.7 million.

Tanque Verde Interceptor

The Tanque Verde Interceptor (TVI) was installed in 1980, under the plan name: Tanque Verde Interceptor Sewer – Indian Ridge Terrace to Camino Seco. When constructed in 1980, the line ranged in size from 33, 30, 24 and 21 inches in size and was composed of VCP, DIP, and unlined RCP construction. The interceptor is aligned along the south bank of the Tanque Verde Wash. Trunks to the interceptor were constructed earlier, these are the: Sanitary District No. 1 – Contract No. 42 (1960), Sanitary District No. 1 – Contract 61B (1968), Sanitary District– Contract No. 73 (1968) and the Camino Seco Trunk Sewer (1986).

Future plans from PCWMD include a Capital Improvement Project (CIP) to extend and connect the interceptor from the existing Rillito Wash crossing west into the South Rillito interceptor system at Craycroft Road. Also planned improvements are to extend the interceptor east from Camino Seco to Tanque Verde Loop.

Wastewater generated in the southern portion of the Tanque Verde Wash drainage basin is currently conveyed to the North Rillito Interceptor. The Rillito Wash crossing is a gravity line crossing, located north of the Tucson Country Club Estates (West of Sabino Canyon Road).

Tanque Verde Interceptor CCTV and Condition Assessment Summary

The TVI system inspected length, including trunks, is approximately 47,571 feet and flows from the southeast to the northwest (see Figure 4.1.19). The Tanque Verde Interceptor is 20,797 feet long and begins on Wrightstown Road, just east of Spanish Moss Avenue. The line then travels

northwest and ends just north of the Tanque Verde Creek at a manhole, in a drainage way, just south of Riverbend Circle. The flows from the TVI system empty into the North Rillito Interceptor.

There are two trunks that feed into the TVI, the TVI-T Southeast and TVI-T Southwest. The TVI-T Southeast trunk is 17,573 feet long and begins just east of Shadow Brook Place on Broadway Boulevard and proceeds north on Camino Seco to the TVI, across Wrightstown Road but south of the Tanque Verde Creek. The TVI-T Southwest trunk is 9,201 feet long and begins east of Kolb Road and South of Corto Caravaca, then heads northwest along the east bank of the Pantano Wash and crosses Tanque Verde Road, then heads north through the Tucson Country Club Estates and flows into the TVI, just south of the Tanque Verde Creek. A summary of CCTV inspected interceptor and trunk piping lengths based on pipe diameters is presented below:

Diameter	18”	20”	21”	24”	27”	30”	33”	Total
Length (ft)	26,774	737	2,151	10,046	1,650	4,679	1,534	47,571

Along the TVI and TVI trunk alignments there are four different types of piping materials that were used for construction. The predominant material is PVC in addition to DIP, VCP, and unlined RCP. The table presented below details the total CCTV inspected length of interceptor and trunks for each type of pipe material:

Pipe Material	PVC	DIP w/ unknown liner	DIP w/double mortar lining	VCP	Unlined RCP	Total
Length (ft)	19,916	2,425	6,015	9,201	10,014	47,571

The DIP found on the TVI system has two types of linings, one is unknown and the other is double mortar lining. The corrosion characteristics of the DIP on eighteen (18) reaches of the TVI were similar to that of unlined RCP spalling which raised doubts on the type of pipe material. After conferring with PCWMD and researching the as-builts, it was confirmed that the 18 reaches comprised DIP but with an unusual lining for sewer systems, i.e. double mortar lining. Double mortar lining is generally used in potable water conveyance systems.

Based upon the CCTV inspection and condition assessment, it was determined that the interceptor is predominately Grade 2 (Good) with the remainder Grade 3 (Fair) requiring monitoring and CCTV investigation/condition assessment in 2008. The estimated cost for spot repairs on Grade 4 is $90,000 and for future rehabilitation on approximately 30,000 linear feet of interceptor considered Grade 3 is $8.7 million.

Sewer Manholes

Pima County Wastewater Management Department has a service area extending over 370 square miles. The entire system contains approximately 60,000 manholes and cleanouts with a significant number (estimated 20 percent) of these located in non-pavement portions of Tucson. This number of manholes combined with the location in challenging terrain makes the Pima County collection system unique. Manhole construction dates from 1900 to present. Materials used include concrete, brick and pre-cast concrete.

Pima County is nearing completion of the sanitary sewer Inspection and Inventory Project. Approximately 45,400 of the 60,000 manholes are complete. A total of 1,498 manholes, or 3.3 percent, have been identified in need of rehabilitation at a cost of $4.5 million. The total anticipated number of manholes to be rehabilitated based on 3.3 percent is 1,980. The total cost for rehabilitation could be as high as $5.9 million.

Siphons

Pima County's conveyance system has 15 identified siphons. These siphons convey flow under natural depressions and drainage ways. The largest siphons cross the metropolitan Tucson water ways; the Santa Cruz and Rillito Rivers. The siphons usually contain an upstream and downstream structure along with multiple barrels to convey the flows. Siphon barrel size varies from a minimum of 6 inches to a maximum of 39 inches. Material types vary ranging from VCP, DIP and RCP.

In 2002-2003 twelve of the fifteen siphons were cleaned and inspected as part of the CCTV Interceptor inspection. Three siphons (Alameda, Sweetwater, and Tucson Boulevard) have been rehabilitated in the last couple of years. Several existing upstream and downstream siphon boxes showed damage from hydrogen sulfide damage and should be rehabilitated.

Lift Stations

Pima County topography varies in the Tucson Metropolitan Area from 1,800 feet mean sea level (MSL) to approximately 3,900 feet MSL mirroring the pressure service area for the County's largest water supplier, Tucson Water. Because of the elevation changes in the metropolitan area, lift stations in some areas are required to direct flows to the gravity trunk and interceptor system.

Pima County Wastewater Management Department operates and maintains a total of 33 lift stations, four of which are presently inactive. The lift station pumps range in size from 1 horsepower (hp) at Mission to 600 hp at Continental Ranch. The Continental Ranch lift station is the largest and is a regional facility with a rated pump capacity of 6.0 MGD.

In 2003, PCWMD completed a CIP project to provide a SCADA system for remote monitoring and control of the lift stations. Many lift station wetwells require rehabilitation along with conveyance upgrades such as site lighting, potable water service and enclosure upgrades.

Table 4.1.4 Existing Interceptor System Condition Assessment Rehabilitation Costs

Interceptor Detail		Grade 4 (Poor)	Grade 3 (Fair)
CODE	Description	($)	($)
ACSC	Aviation Corridor to Santa Cruz	224,000	4,260,000
ACSE	Aviation Corridor to South East	262,000	14,150,000
CDO	Canada del Oro	1,120,000	3,100,000
NRI	North Rillito Interceptor	0	29,800,000
ONH	Old Nogales Highway	8,400,000	3,900,000
PTI	Pantano Interceptor	450,000	19,100,000
SCC	Santa Cruz Central	288,000	2,500,000
SCE	Santa Cruz East	541,000	2,100,000
SCI	Santa Cruz Interceptor	546,000	9,700,000
SEI	South East Interceptor	920,000	39,100,000
SRRR	South Rillito Roger Road	23,000	0
SRWC	South Rillito West Central	130,000	5,400,000
SRWN	South Rillito West North	74,000	3,600,000
SRWS	South Rillito West South	0	2,600,000
SWI	South West Interceptor	396,000	13,700,000
TVI	Tanque Verde Interceptor	90,000	8,700,000
	Total	13,469,000	161,710,000

Major Flow Management Structures

Flow management structures in the PCWMD conveyance system are specialized structures that can change flows from incoming interceptors into outgoing interceptors. Flow control is managed amongst interceptors and the two major wastewater treatment plants by changing weir boards or moving gated valve positions within the

structure. Four major flow management structures are located in the conveyance system: Alameda Street, 18th and Vine Streets, Tucson Boulevard, and Craycroft Road.

Alameda flow management structure. Incoming 42-inch SEI, outgoing 42-inch NWO and 24 inch SCC. This structure is located in the downtown area and flow management of all flows is tributary to the Roger Road WWTP.

18th and Vine Streets flow management structure. Incoming 42-inch ACSE, outgoing 21 inch ACSC and 33-inch ACSE. This structure is located midtown near the Aviation Corridor. Flow management of all flows is tributary to the Roger Road WWTP treatment basin.

Tucson Boulevard flow management structure. Incoming 36-inch SRWC, outgoing 54 inch SRWC and 36 inch NRI. This structure is located north of midtown, adjacent to the Rillito River. Flow management of flows can shift approximately 5.35 MGD from the Roger Road WWTP to the Ina Road WPCF.

Craycroft Road flow management structure. Incoming 36-inch PTI, outgoing 24-inch NRI and 48-inch SRWC. This structure is located adjacent to the Rillito River and Craycroft Road. Flow management of flows can shift approximately 2 MGD from the Roger Road WWTP to the Ina Road WPCF.

Numerous smaller redwood board and concrete weir structures exist throughout the conveyance system to manage flow.

Summary and Recommendations

Although 230 miles of interceptor systems were CCTV inspected in 2003, there remains 2,935 miles of unknown system conditions. It is recommended that the CCTV program be enhanced within the next ten years to achieve total system condition assessment/evaluation. The CCTV program will continue to provide data to address and prioritize system features as well as prioritize future rehabilitation/repair projects of varying magnitude. Additionally, enhancement of the CCTV program will contribute to conformance with Capacity, Management, Operations, and Maintenance (CMOM) regulations (ADEQ R18-9-C305, 2.05) General Permit and strengthen PCWMD's Asset Management Program.

Pima County Wastewater Management Department needs to engage an aggressive manhole rehabilitation program. To date, there are nearly 1,500 documented manholes requiring rehabilitation, resulting from efforts of the Sanitary Sewer Inspection and Inventory Project (SSIIP).

Quantitative dollar amounts of Grade 3 and 4 rehabilitation for the evaluated interceptors are provided in Table 4.1.2 and are reflected in the CIP, Table 8.1. The Grade 4 rehabilitation projects need to be accomplished as soon as possible. The Grade 3 rehabilitation projects are anticipated for completion over the next 20 years based on CCTV/condition assessments every five years, with the first scheduled in 2008. In addition, manhole rehabilitation/replacement is anticipated to be between $4.5 and $6.0 million based upon final completion of the manhole database project.

AVIATION CORRIDOR TO SANTA CRUZ (ACSC) INTERCEPTOR SYSTEM

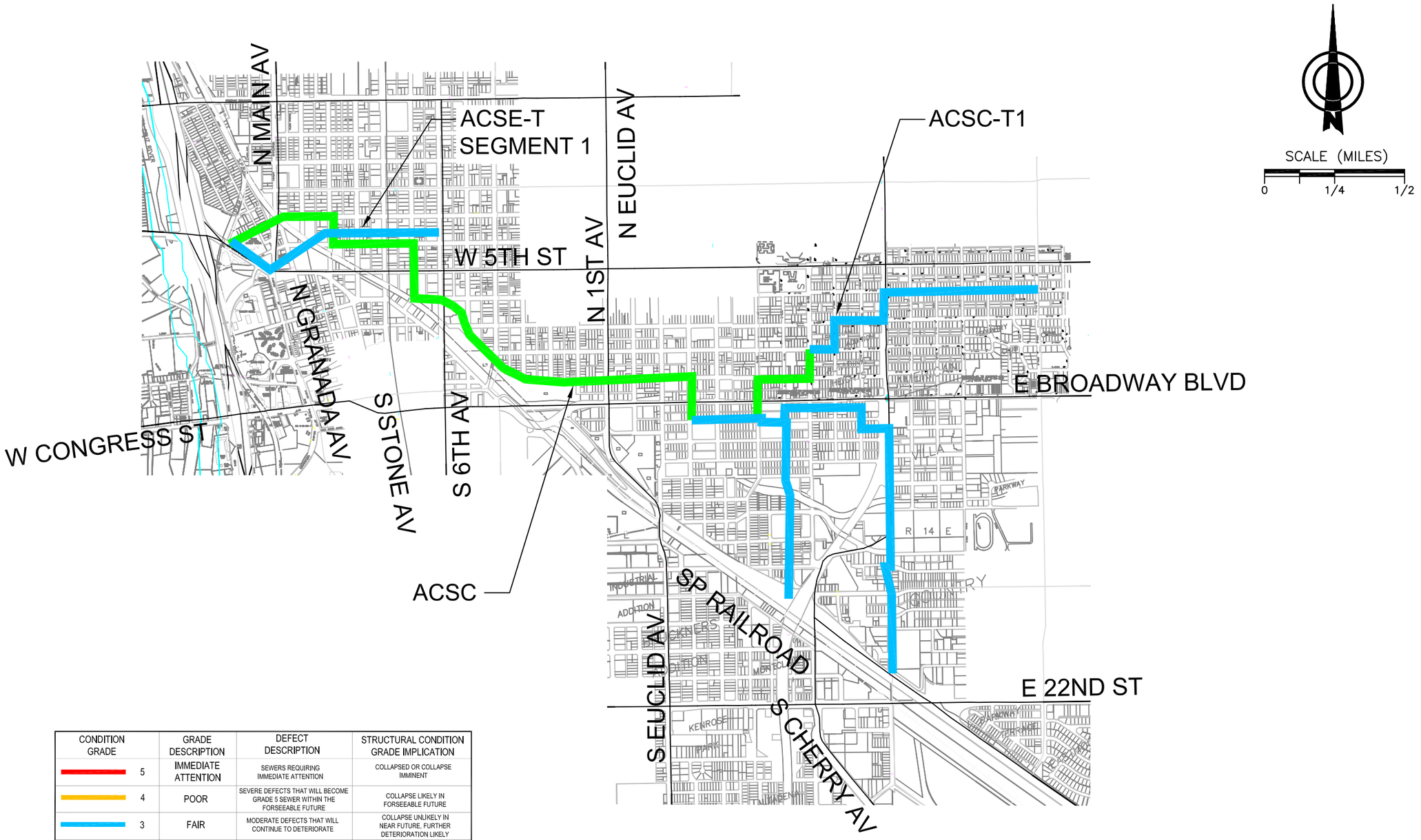

CONDITION GRADE	GRADE DESCRIPTION	DEFECT DESCRIPTION	STRUCTURAL CONDITION GRADE IMPLICATION
5	IMMEDIATE ATTENTION	SEWERS REQUIRING IMMEDIATE ATTENTION	COLLAPSED OR COLLAPSE IMMINENT
4	POOR	SEVERE DEFECTS THAT WILL BECOME GRADE 5 SEWER WITHIN THE FORSEEABLE FUTURE	COLLAPSE LIKELY IN FORSEEABLE FUTURE
3	FAIR	MODERATE DEFECTS THAT WILL CONTINUE TO DETERIORATE	COLLAPSE UNLIKELY IN NEAR FUTURE, FURTHER DETERIORATION LIKELY
2	GOOD	MINOR AND FEW MODERATE DEFECTS	MINIMAL NEAR-TERM RISK OF COLLAPSE, POTENTIAL FOR FURTHER DETERIORATION

Pima County Wastewater Management Department
Metropolitan Area Facility Plan Update

Figure 4.1.3
AVIATION CORRIDOR TO SANTA CRUZ (ACSC) INTERCEPTOR SYSTEM

AVIATION CORRIDOR TO SOUTHEAST (ACSE) INTERCEPTOR SYSTEM

CONDITION GRADE	GRADE DESCRIPTION	DEFECT DESCRIPTION	STRUCTURAL CONDITION GRADE IMPLICATION
5	IMMEDIATE ATTENTION	SEWERS REQUIRING IMMEDIATE ATTENTION	COLLAPSED OR COLLAPSE IMMINENT
4	POOR	SEVERE DEFECTS THAT WILL BECOME GRADE 5 SEWER WITHIN THE FORSEEABLE FUTURE	COLLAPSE LIKELY IN FORSEEABLE FUTURE
3	FAIR	MODERATE DEFECTS THAT WILL CONTINUE TO DETERIORATE	COLLAPSE UNLIKELY IN NEAR FUTURE, FURTHER DETERIORATION LIKELY
2	GOOD	MINOR AND FEW MODERATE DEFECTS	MINIMAL NEAR-TERM RISK OF COLLAPSE, POTENTIAL FOR FURTHER DETERIORATION

Pima County Wastewater Management Department
Metropolitan Area Facility Plan Update

Figure 4.1.4
AVIATION CORRIDOR TO SOUTHEAST (ACSE) INTERCEPTOR SYSTEM

CANADA DEL ORO (CDO) INTERCEPTOR SYSTEM

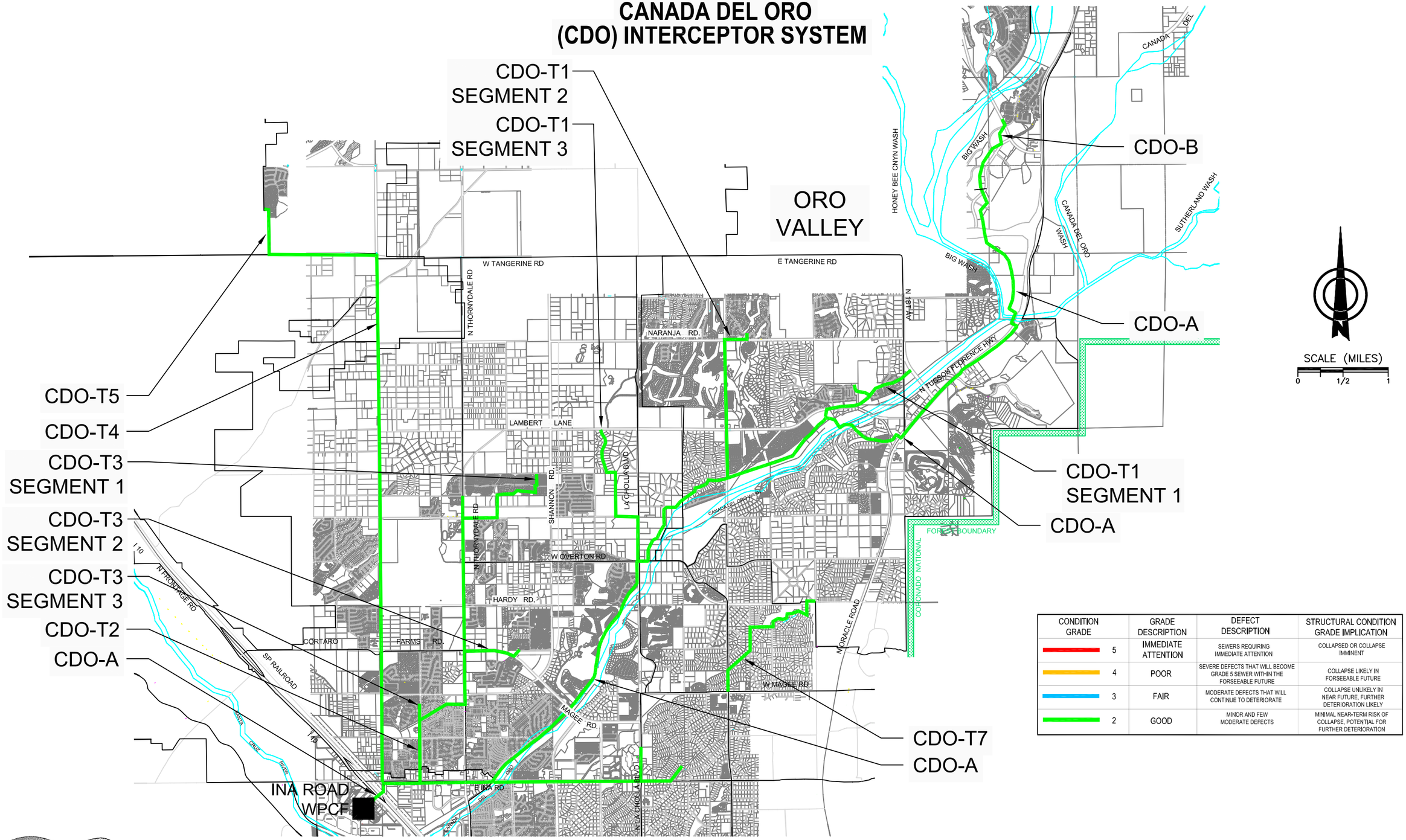

CONDITION GRADE	GRADE DESCRIPTION	DEFECT DESCRIPTION	STRUCTURAL CONDITION GRADE IMPLICATION
5	IMMEDIATE ATTENTION	SEWERS REQUIRING IMMEDIATE ATTENTION	COLLAPSED OR COLLAPSE IMMINENT
4	POOR	SEVERE DEFECTS THAT WILL BECOME GRADE 5 SEWER WITHIN THE FORSEEABLE FUTURE	COLLAPSE LIKELY IN FORSEEABLE FUTURE
3	FAIR	MODERATE DEFECTS THAT WILL CONTINUE TO DETERIORATE	COLLAPSE UNLIKELY IN NEAR FUTURE, FURTHER DETERIORATION LIKELY
2	GOOD	MINOR AND FEW MODERATE DEFECTS	MINIMAL NEAR-TERM RISK OF COLLAPSE, POTENTIAL FOR FURTHER DETERIORATION

Pima County Wastewater Management Department
Metropolitan Area Facility Plan Update

Figure 4.1.5
CANADA DEL ORO
(CDO) INTERCEPTOR SYSTEM

NORTH RILLITO INTERCEPTOR (NRI) SYSTEM

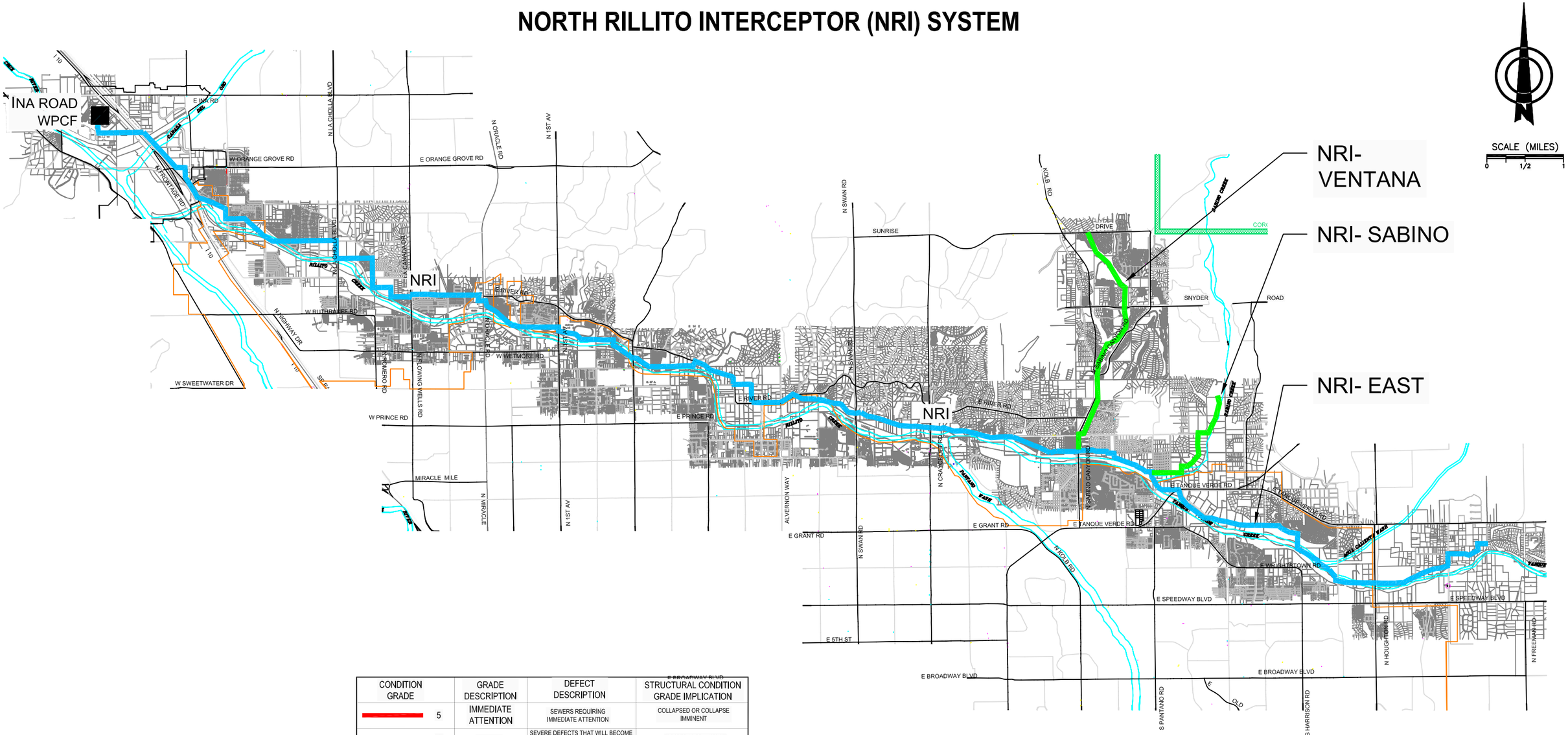

CONDITION GRADE	GRADE DESCRIPTION	DEFECT DESCRIPTION	STRUCTURAL CONDITION GRADE IMPLICATION
5	IMMEDIATE ATTENTION	SEWERS REQUIRING IMMEDIATE ATTENTION	COLLAPSED OR COLLAPSE IMMINENT
4	POOR	SEVERE DEFECTS THAT WILL BECOME GRADE 5 SEWER WITHIN THE FORSEEABLE FUTURE	COLLAPSE LIKELY IN FORSEEABLE FUTURE
3	FAIR	MODERATE DEFECTS THAT WILL CONTINUE TO DETERIORATE	COLLAPSE UNLIKELY IN NEAR FUTURE, FURTHER DETERIORATION LIKELY
2	GOOD	MINOR AND FEW MODERATE DEFECTS	MINIMAL NEAR-TERM RISK OF COLLAPSE, POTENTIAL FOR FURTHER DETERIORATION

Pima County Wastewater Management Department
Metropolitan Area Facility Plan Update

Figure 4.1.6
NORTH RILLITO
INTERCEPTOR (NRI) SYSTEM

NORTH WEST OUTFALL (NWO) INTERCEPTOR

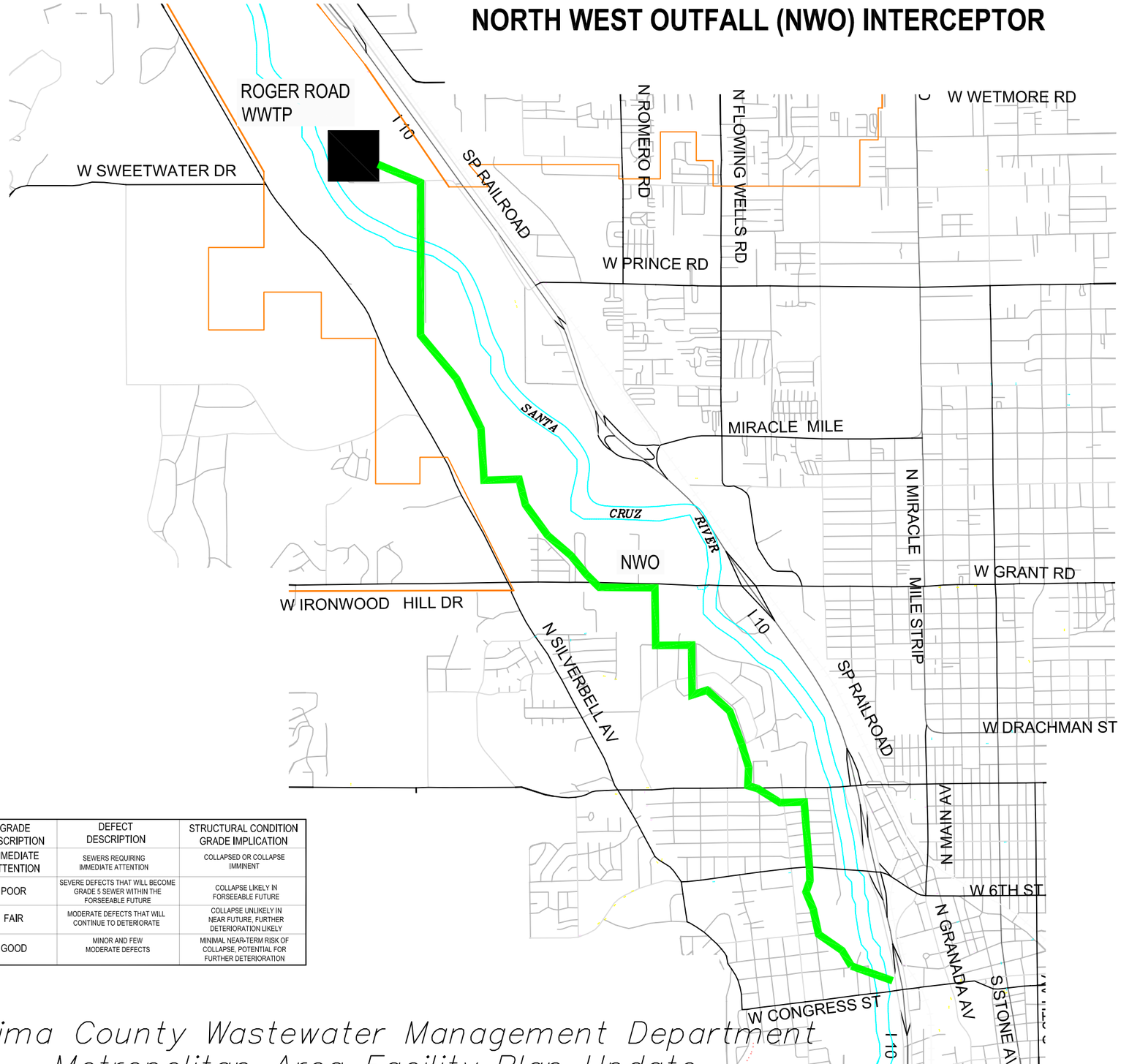

SCALE (MILES)

0 1/2 1

CONDITION GRADE	GRADE DESCRIPTION	DEFECT DESCRIPTION	STRUCTURAL CONDITION GRADE IMPLICATION
5	IMMEDIATE ATTENTION	SEWERS REQUIRING IMMEDIATE ATTENTION	COLLAPSED OR COLLAPSE IMMINENT
4	POOR	SEVERE DEFECTS THAT WILL BECOME GRADE 5 SEWER WITHIN THE FORSEEABLE FUTURE	COLLAPSE LIKELY IN FORSEEABLE FUTURE
3	FAIR	MODERATE DEFECTS THAT WILL CONTINUE TO DETERIORATE	COLLAPSE UNLIKELY IN NEAR FUTURE, FURTHER DETERIORATION LIKELY
2	GOOD	MINOR AND FEW MODERATE DEFECTS	MINIMAL NEAR-TERM RISK OF COLLAPSE, POTENTIAL FOR FURTHER DETERIORATION

Pima County Wastewater Management Department
Metropolitan Area Facility Plan Update

Figure 4.1.7

NORTH WEST OUTFALL (NWO) INTERCEPTOR

OLD NOGALES HIGHWAY (ONH) INTERCEPTOR

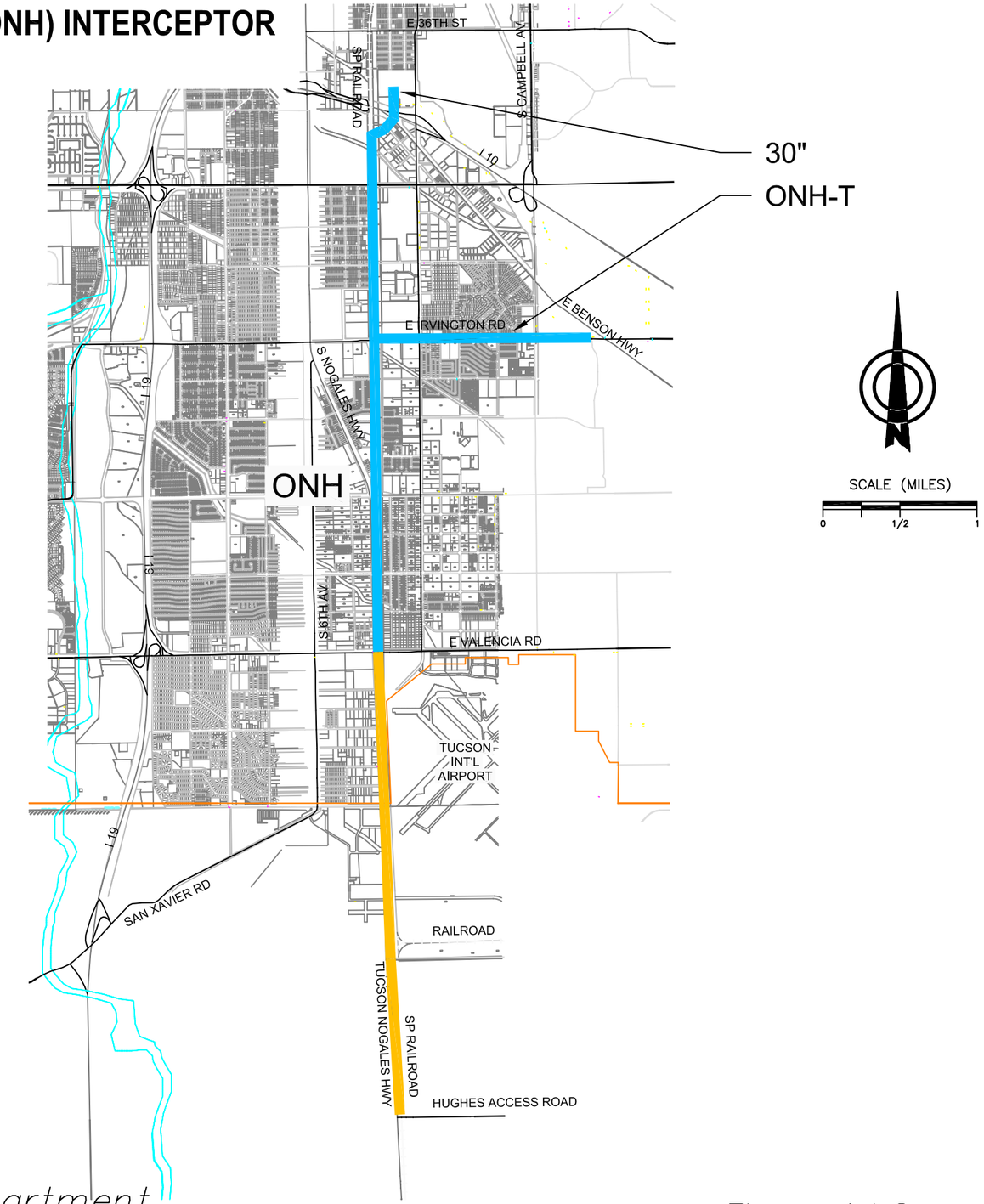

CONDITION GRADE	GRADE DESCRIPTION	DEFECT DESCRIPTION	STRUCTURAL CONDITION GRADE IMPLICATION
5	IMMEDIATE ATTENTION	SEWERS REQUIRING IMMEDIATE ATTENTION	COLLAPSED OR COLLAPSE IMMINENT
4	POOR	SEVERE DEFECTS THAT WILL BECOME GRADE 5 SEWER WITHIN THE FORSEEABLE FUTURE	COLLAPSE LIKELY IN FORSEEABLE FUTURE
3	FAIR	MODERATE DEFECTS THAT WILL CONTINUE TO DETERIORATE	COLLAPSE UNLIKELY IN NEAR FUTURE, FURTHER DETERIORATION LIKELY
2	GOOD	MINOR AND FEW MODERATE DEFECTS	MINIMAL NEAR-TERM RISK OF COLLAPSE, POTENTIAL FOR FURTHER DETERIORATION

Pima County Wastewater Management Department
Metropolitan Area Facility Plan Update

Figure 4.1.8

OLD NOGALES HIGHWAY (ONH) INTERCEPTOR

PANTANO INTERCEPTOR (PTI)

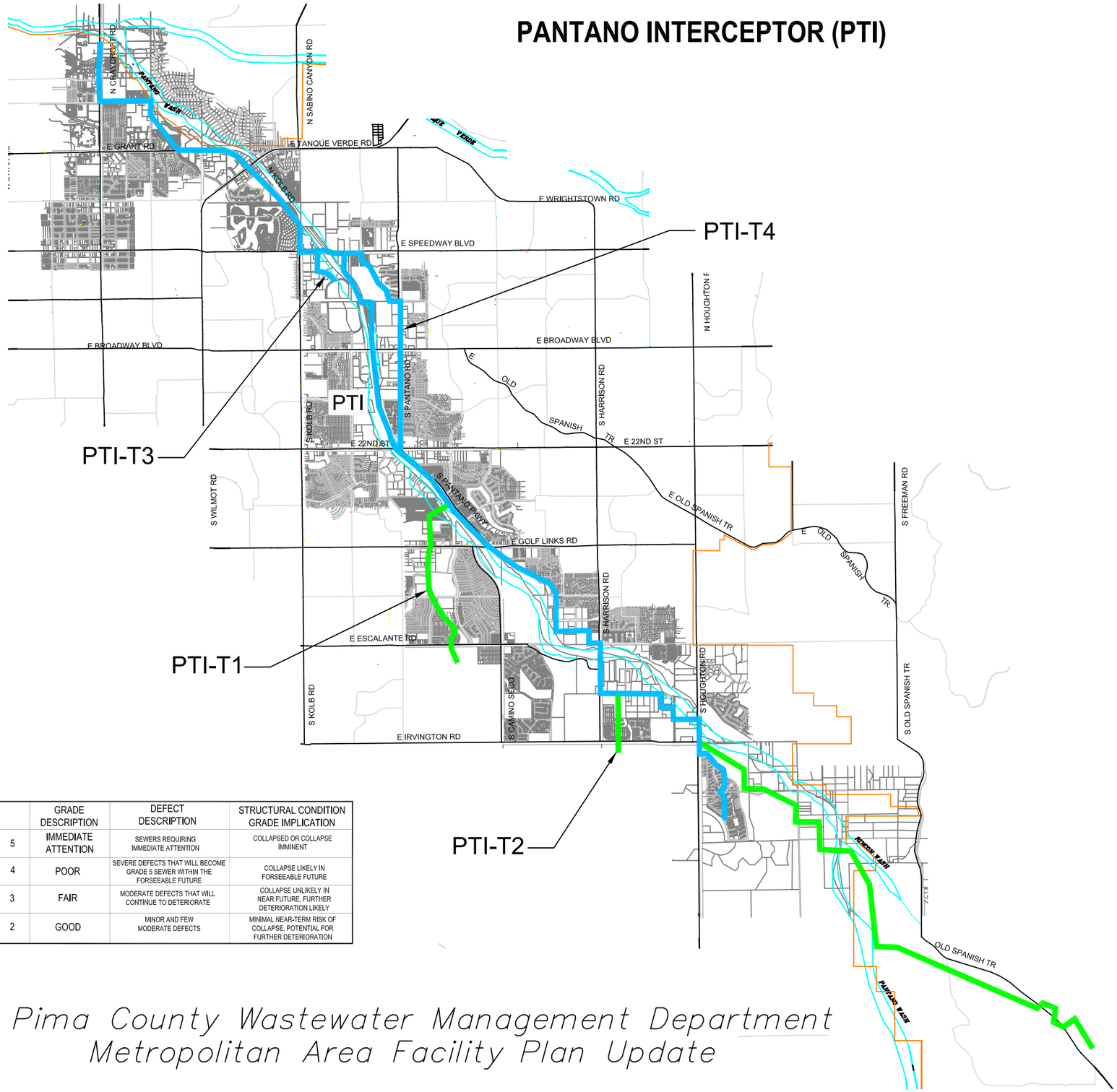

SCALE (MILES)
0 1/2 1

CONDITION GRADE	GRADE DESCRIPTION	DEFECT DESCRIPTION	STRUCTURAL CONDITION GRADE IMPLICATION
5	IMMEDIATE ATTENTION	SEWERS REQUIRING IMMEDIATE ATTENTION	COLLAPSED OR COLLAPSE IMMINENT
4	POOR	SEVERE DEFECTS THAT WILL BECOME GRADE 5 SEWER WITHIN THE FORSEEABLE FUTURE	COLLAPSE LIKELY IN FORSEEABLE FUTURE
3	FAIR	MODERATE DEFECTS THAT WILL CONTINUE TO DETERIORATE	COLLAPSE UNLIKELY IN NEAR FUTURE, FURTHER DETERIORATION LIKELY
2	GOOD	MINOR AND FEW MODERATE DEFECTS	MINIMAL NEAR-TERM RISK OF COLLAPSE, POTENTIAL FOR FURTHER DETERIORATION

Pima County Wastewater Management Department
Metropolitan Area Facility Plan Update

Figure 4.1.9
PANTANO INTERCEPTOR (PTI) SYSTEM

SANTA CRUZ CENTRAL (SCC) INTERCEPTOR

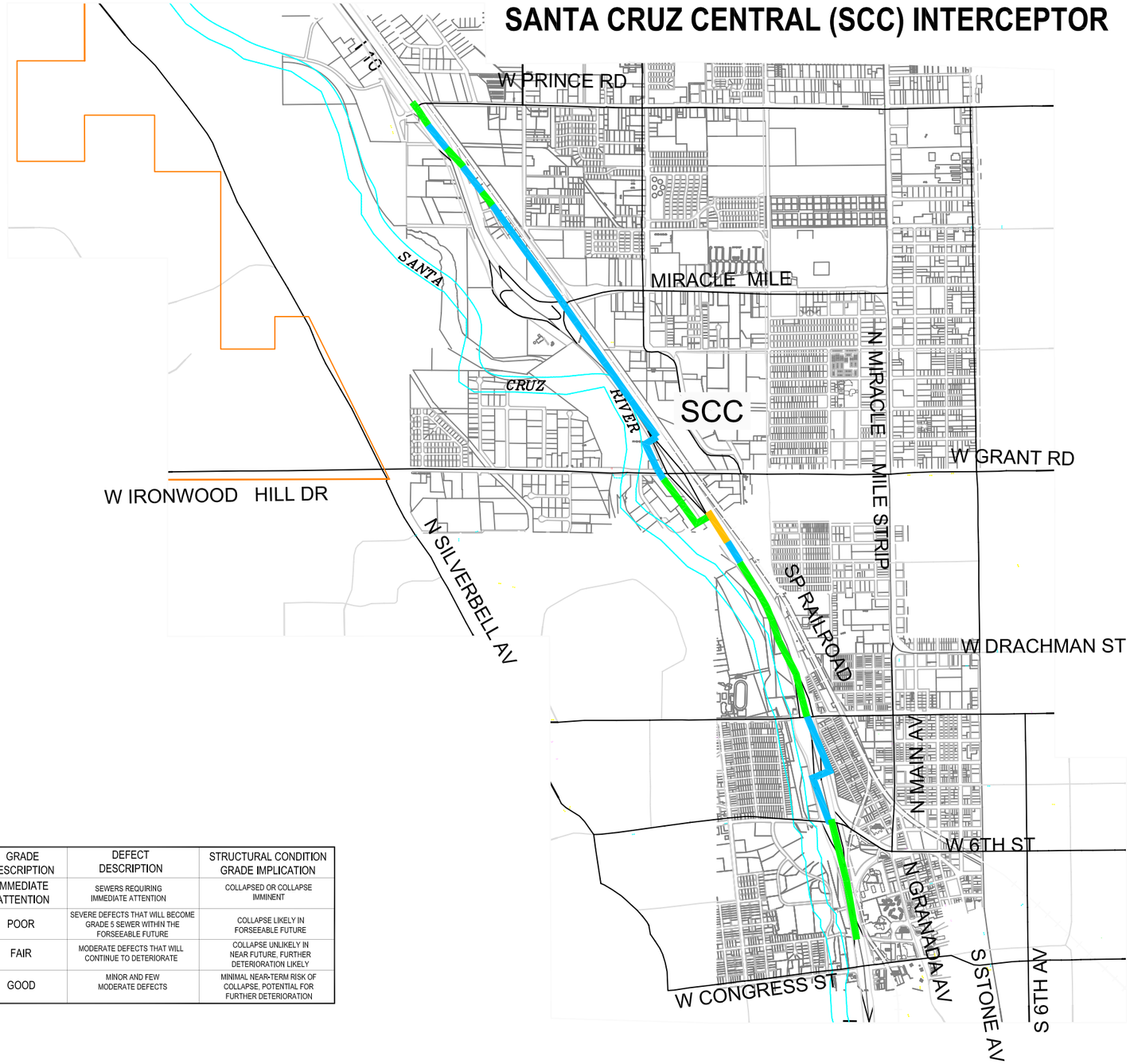

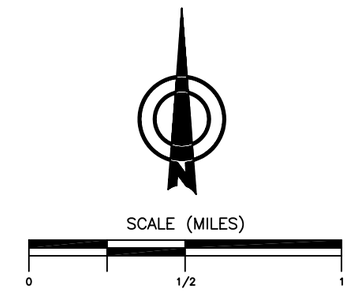

CONDITION GRADE	GRADE DESCRIPTION	DEFECT DESCRIPTION	STRUCTURAL CONDITION GRADE IMPLICATION
5	IMMEDIATE ATTENTION	SEWERS REQUIRING IMMEDIATE ATTENTION	COLLAPSED OR COLLAPSE IMMINENT
4	POOR	SEVERE DEFECTS THAT WILL BECOME GRADE 5 SEWER WITHIN THE FORSEEABLE FUTURE	COLLAPSE LIKELY IN FORSEEABLE FUTURE
3	FAIR	MODERATE DEFECTS THAT WILL CONTINUE TO DETERIORATE	COLLAPSE UNLIKELY IN NEAR FUTURE, FURTHER DETERIORATION LIKELY
2	GOOD	MINOR AND FEW MODERATE DEFECTS	MINIMAL NEAR-TERM RISK OF COLLAPSE, POTENTIAL FOR FURTHER DETERIORATION

Pima County Wastewater Management Department
Metropolitan Area Facility Plan Update

Figure 4.1.10
SANTA CRUZ CENTRAL (SCC) INTERCEPTOR

SANTA CRUZ EAST (SCE) INTERCEPTOR

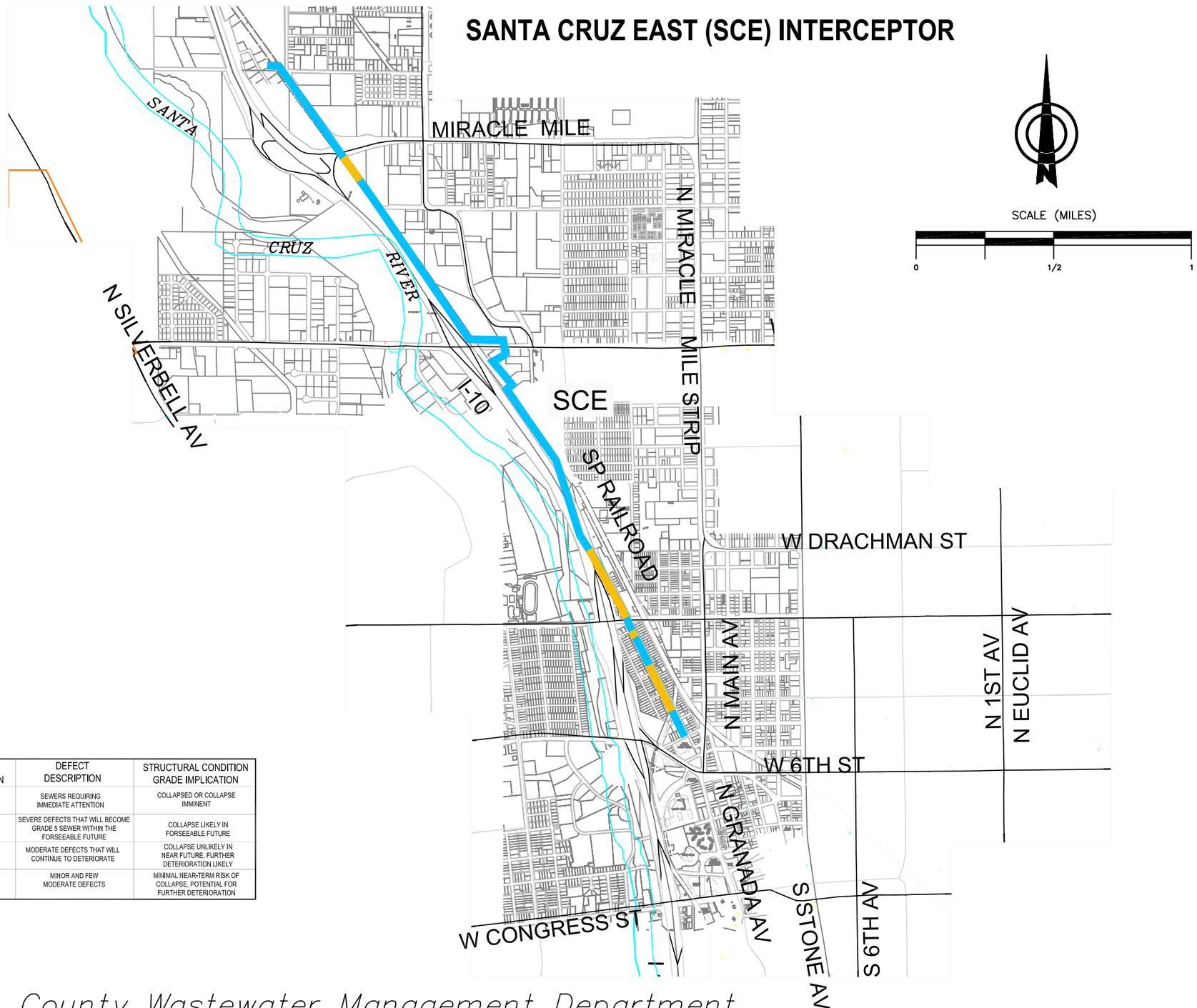

CONDITION GRADE	GRADE DESCRIPTION	DEFECT DESCRIPTION	STRUCTURAL CONDITION GRADE IMPLICATION
5	IMMEDIATE ATTENTION	SEWERS REQUIRING IMMEDIATE ATTENTION	COLLAPSED OR COLLAPSE IMMINENT
4	POOR	SEVERE DEFECTS THAT WILL BECOME GRADE 5 SEWER WITHIN THE FORSEEABLE FUTURE	COLLAPSE LIKELY IN FORSEEABLE FUTURE
3	FAIR	MODERATE DEFECTS THAT WILL CONTINUE TO DETERIORATE	COLLAPSE UNLIKELY IN NEAR FUTURE, FURTHER DETERIORATION LIKELY
2	GOOD	MINOR AND FEW MODERATE DEFECTS	MINIMAL NEAR-TERM RISK OF COLLAPSE, POTENTIAL FOR FURTHER DETERIORATION

Pima County Wastewater Management Department
Metropolitan Area Facility Plan Update

Figure 4.1.11
SANTA CRUZ EAST (SCE) INTERCEPTOR

SANTA CRUZ INTERCEPTOR (SCI)

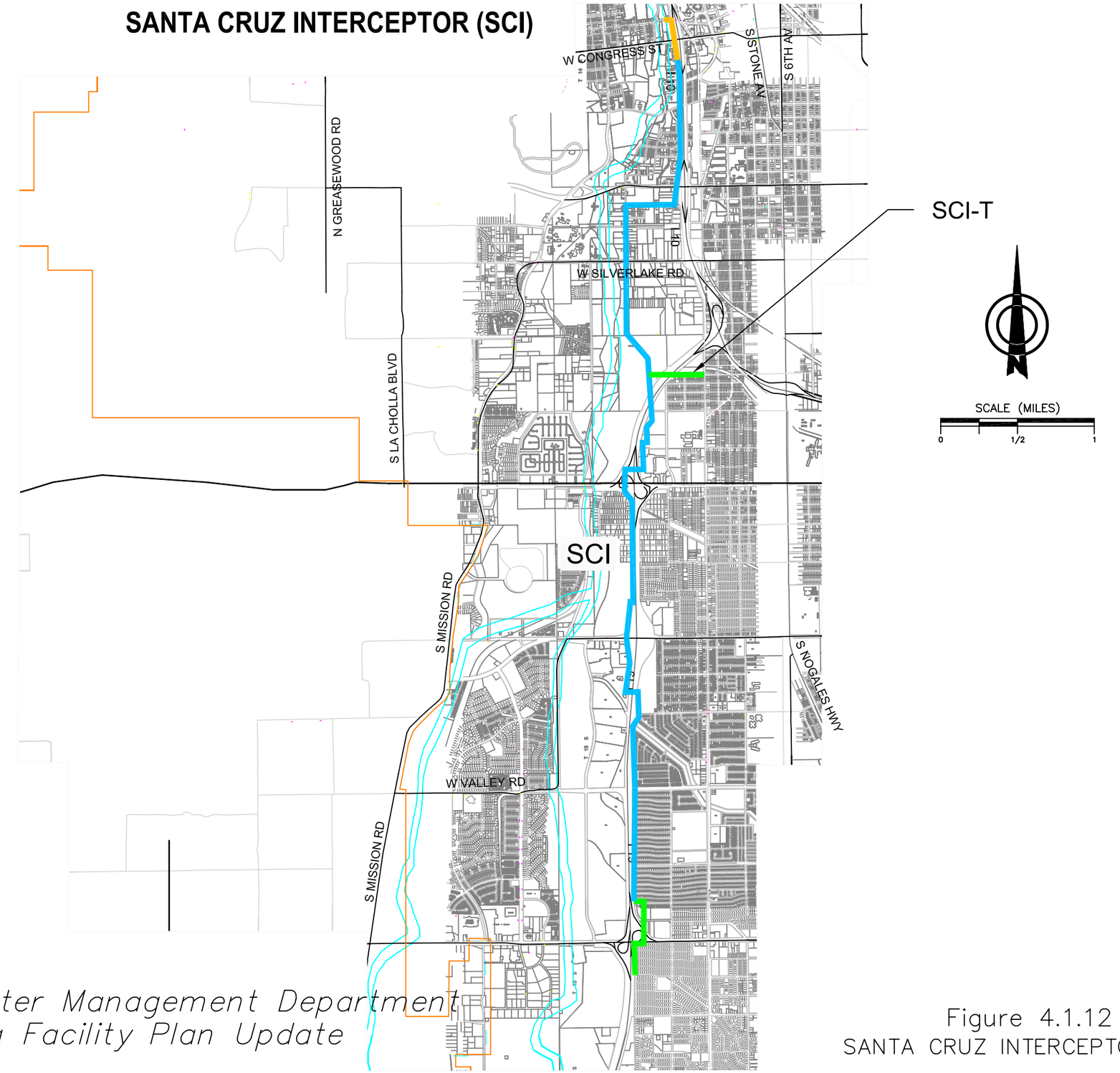

CONDITION GRADE	GRADE DESCRIPTION	DEFECT DESCRIPTION	STRUCTURAL CONDITION GRADE IMPLICATION
5	IMMEDIATE ATTENTION	SEWERS REQUIRING IMMEDIATE ATTENTION	COLLAPSED OR COLLAPSE IMMINENT
4	POOR	SEVERE DEFECTS THAT WILL BECOME GRADE 5 SEWER WITHIN THE FORSEEABLE FUTURE	COLLAPSE LIKELY IN FORSEEABLE FUTURE
3	FAIR	MODERATE DEFECTS THAT WILL CONTINUE TO DETERIORATE	COLLAPSE UNLIKELY IN NEAR FUTURE, FURTHER DETERIORATION LIKELY
2	GOOD	MINOR AND FEW MODERATE DEFECTS	MINIMAL NEAR-TERM RISK OF COLLAPSE, POTENTIAL FOR FURTHER DETERIORATION

Pima County Wastewater Management Department
Metropolitan Area Facility Plan Update

Figure 4.1.12
SANTA CRUZ INTERCEPTOR (SCI)

SOUTHEAST INTERCEPTOR (SEI)

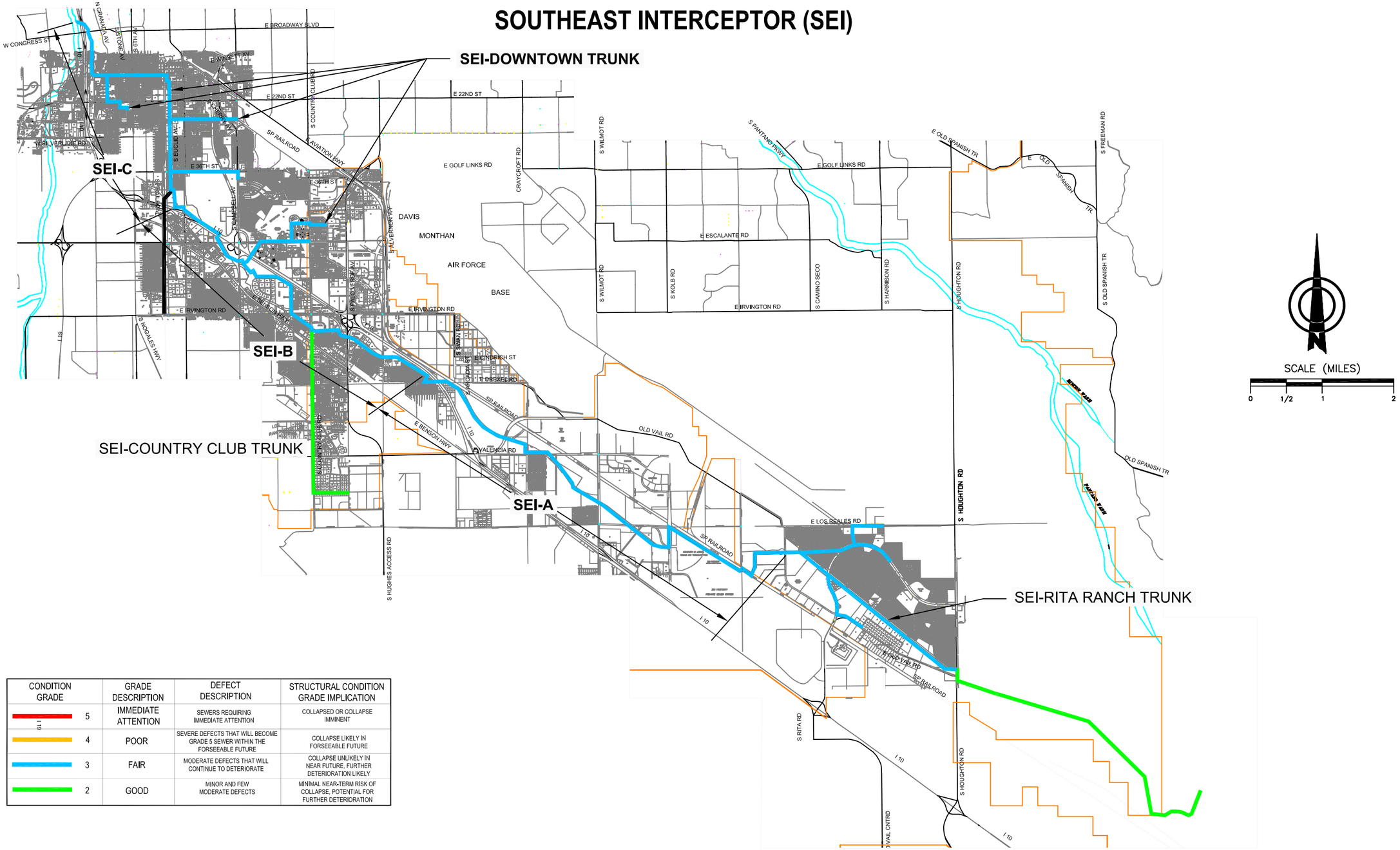

CONDITION GRADE	GRADE DESCRIPTION	DEFECT DESCRIPTION	STRUCTURAL CONDITION GRADE IMPLICATION
5	IMMEDIATE ATTENTION	SEWERS REQUIRING IMMEDIATE ATTENTION	COLLAPSED OR COLLAPSE IMMINENT
4	POOR	SEVERE DEFECTS THAT WILL BECOME GRADE 5 SEWER WITHIN THE FORSEEABLE FUTURE	COLLAPSE LIKELY IN FORSEEABLE FUTURE
3	FAIR	MODERATE DEFECTS THAT WILL CONTINUE TO DETERIORATE	COLLAPSE UNLIKELY IN NEAR FUTURE, FURTHER DETERIORATION LIKELY
2	GOOD	MINOR AND FEW MODERATE DEFECTS	MINIMAL NEAR-TERM RISK OF COLLAPSE, POTENTIAL FOR FURTHER DETERIORATION

Pima County Wastewater Management Department
Metropolitan Area Facility Plan Update

Figure 4.1.13

SOUTHEAST INTERCEPTOR (SEI) SYSTEM

SOUTH RILLITO ROGER ROAD (SRRR) INTERCEPTOR

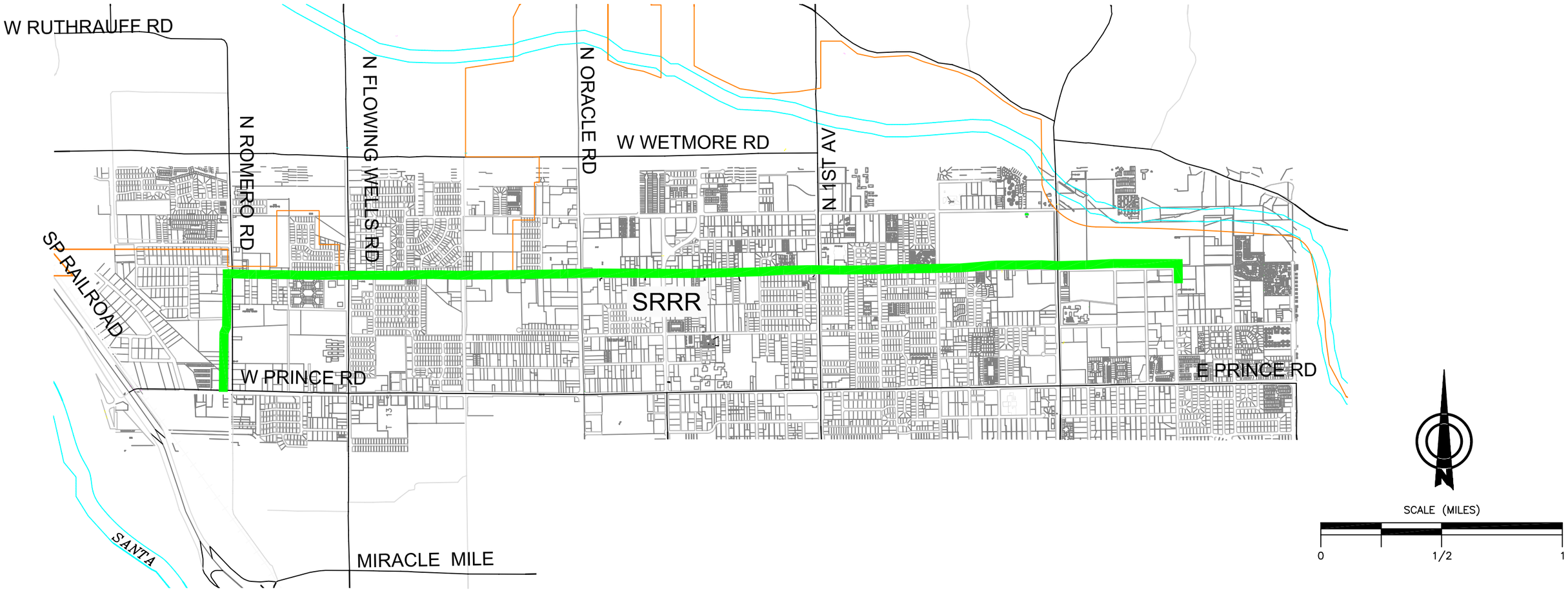

CONDITION GRADE	GRADE DESCRIPTION	DEFECT DESCRIPTION	STRUCTURAL CONDITION GRADE IMPLICATION
5	IMMEDIATE ATTENTION	SEWERS REQUIRING IMMEDIATE ATTENTION	COLLAPSED OR COLLAPSE IMMINENT
4	POOR	SEVERE DEFECTS THAT WILL BECOME GRADE 5 SEWER WITHIN THE FORSEEABLE FUTURE	COLLAPSE LIKELY IN FORSEEABLE FUTURE
3	FAIR	MODERATE DEFECTS THAT WILL CONTINUE TO DETERIORATE	COLLAPSE UNLIKELY IN NEAR FUTURE, FURTHER DETERIORATION LIKELY
2	GOOD	MINOR AND FEW MODERATE DEFECTS	MINIMAL NEAR-TERM RISK OF COLLAPSE, POTENTIAL FOR FURTHER DETERIORATION

Pima County Wastewater Management Department
Metropolitan Area Facility Plan Update

Figure 4.1.14

SOUTH RILLITO ROGER ROAD (SRRR) INTERCEPTOR

SOUTH RILLITO WEST-CENTRAL (SRWC) INTERCEPTOR

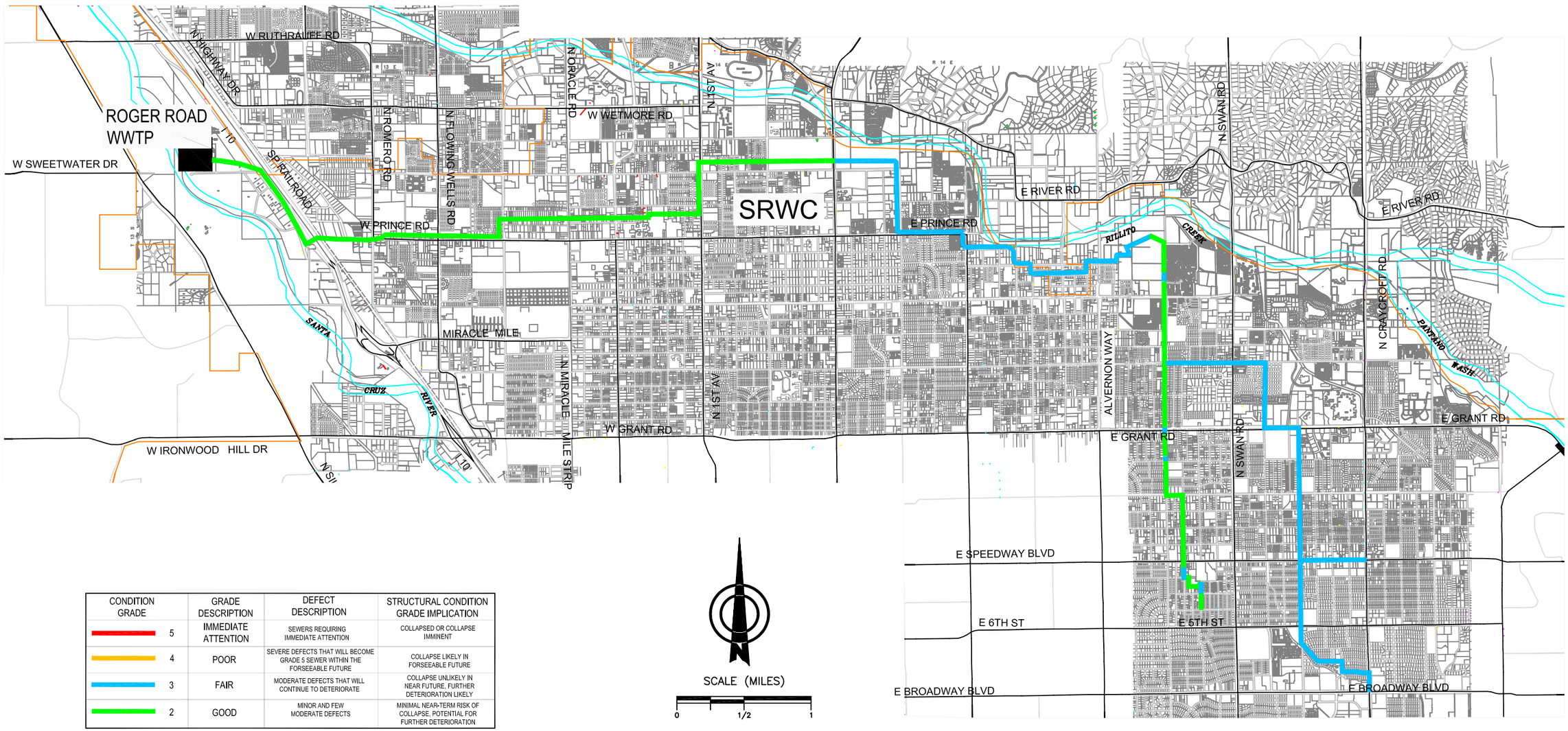

CONDITION GRADE	GRADE DESCRIPTION	DEFECT DESCRIPTION	STRUCTURAL CONDITION GRADE IMPLICATION
5	IMMEDIATE ATTENTION	SEWERS REQUIRING IMMEDIATE ATTENTION	COLLAPSED OR COLLAPSE IMMINENT
4	POOR	SEVERE DEFECTS THAT WILL BECOME GRADE 5 SEWER WITHIN THE FORSEEABLE FUTURE	COLLAPSE LIKELY IN FORSEEABLE FUTURE
3	FAIR	MODERATE DEFECTS THAT WILL CONTINUE TO DETERIORATE	COLLAPSE UNLIKELY IN NEAR FUTURE, FURTHER DETERIORATION LIKELY
2	GOOD	MINOR AND FEW MODERATE DEFECTS	MINIMAL NEAR-TERM RISK OF COLLAPSE, POTENTIAL FOR FURTHER DETERIORATION

Pima County Wastewater Management Department
Metropolitan Area Facility Plan Update

Figure 4.1.15
SOUTH RILLITO WEST-CENTRAL
(SRWC) INTERCEPTOR

SOUTH RILLITO WEST - NORTH (SRWN) INTERCEPTOR

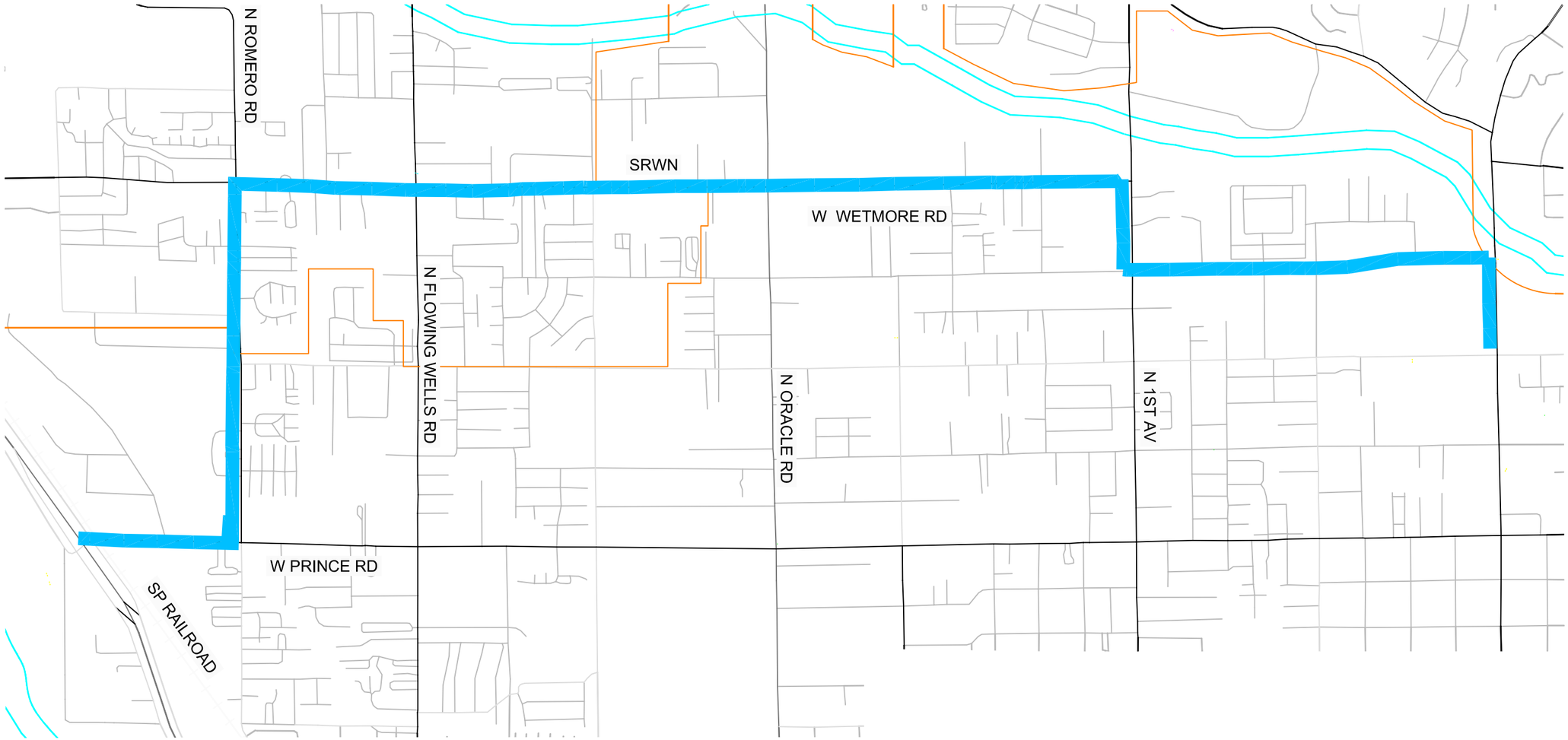

CONDITION GRADE	GRADE DESCRIPTION	DEFECT DESCRIPTION	STRUCTURAL CONDITION GRADE IMPLICATION
5	IMMEDIATE ATTENTION	SEWERS REQUIRING IMMEDIATE ATTENTION	COLLAPSED OR COLLAPSE IMMINENT
4	POOR	SEVERE DEFECTS THAT WILL BECOME GRADE 5 SEWER WITHIN THE FORSEEABLE FUTURE	COLLAPSE LIKELY IN FORSEEABLE FUTURE
3	FAIR	MODERATE DEFECTS THAT WILL CONTINUE TO DETERIORATE	COLLAPSE UNLIKELY IN NEAR FUTURE, FURTHER DETERIORATION LIKELY
2	GOOD	MINOR AND FEW MODERATE DEFECTS	MINIMAL NEAR-TERM RISK OF COLLAPSE, POTENTIAL FOR FURTHER DETERIORATION

SCALE (MILES)

0 1/4 1/2

Pima County Wastewater Management Department
Metropolitan Area Facility Plan Update

Figure 4.1.16

SOUTH RILLITO WEST NORTH (SRWN) INTERCEPTOR

SOUTH RILLITO WEST - SOUTH (SRWS) INTERCEPTOR

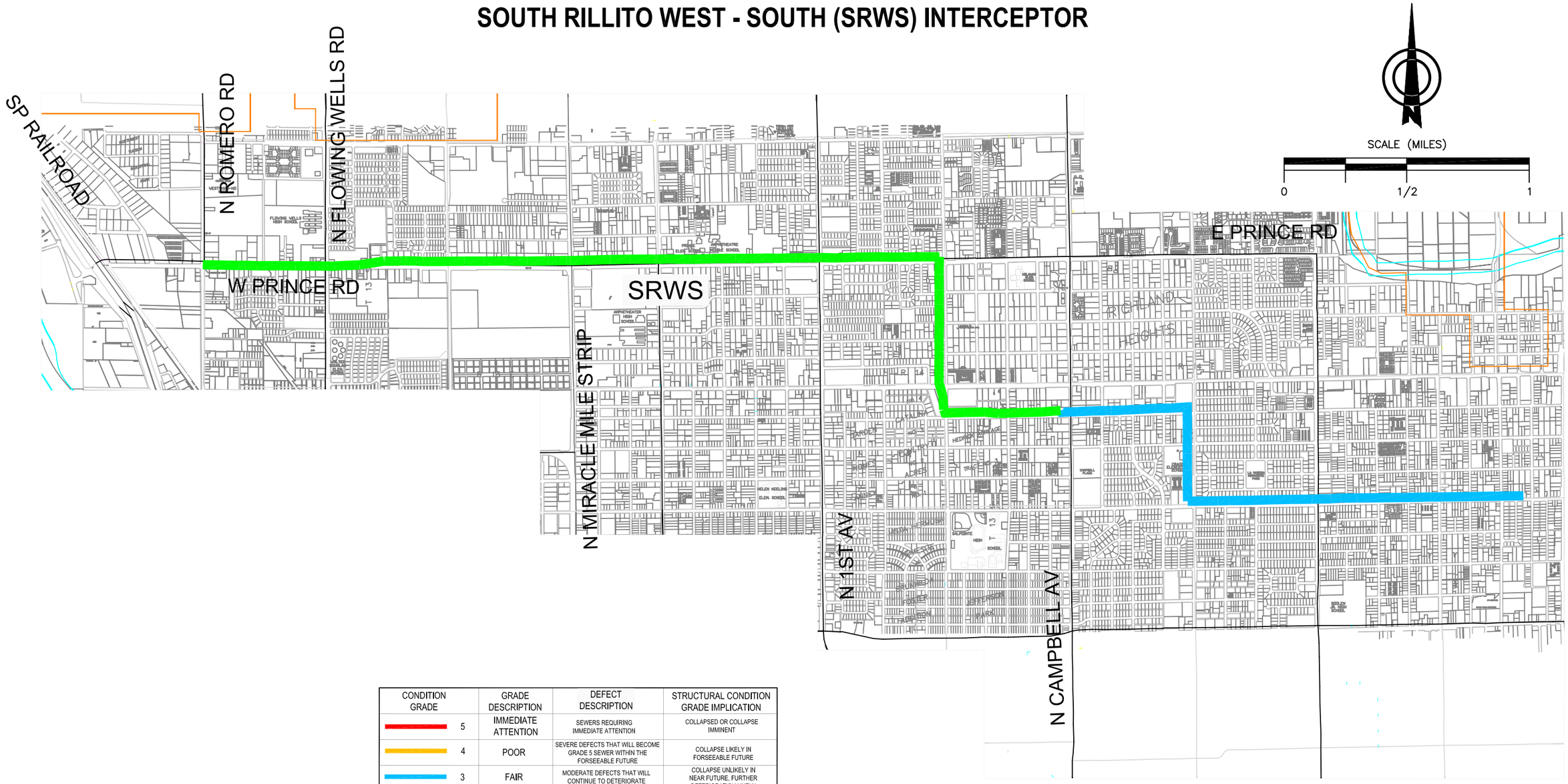

CONDITION GRADE	GRADE DESCRIPTION	DEFECT DESCRIPTION	STRUCTURAL CONDITION GRADE IMPLICATION
5	IMMEDIATE ATTENTION	SEWERS REQUIRING IMMEDIATE ATTENTION	COLLAPSED OR COLLAPSE IMMINENT
4	POOR	SEVERE DEFECTS THAT WILL BECOME GRADE 5 SEWER WITHIN THE FORSEEABLE FUTURE	COLLAPSE LIKELY IN FORSEEABLE FUTURE
3	FAIR	MODERATE DEFECTS THAT WILL CONTINUE TO DETERIORATE	COLLAPSE UNLIKELY IN NEAR FUTURE, FURTHER DETERIORATION LIKELY
2	GOOD	MINOR AND FEW MODERATE DEFECTS	MINIMAL NEAR-TERM RISK OF COLLAPSE, POTENTIAL FOR FURTHER DETERIORATION

Pima County Wastewater Management Department
Metropolitan Area Facility Plan Update

Figure 4.1.17

SOUTH RILLITO WEST – SOUTH (SRWS) INTERCEPTOR

SOUTHWEST INTERCEPTOR (SWI)

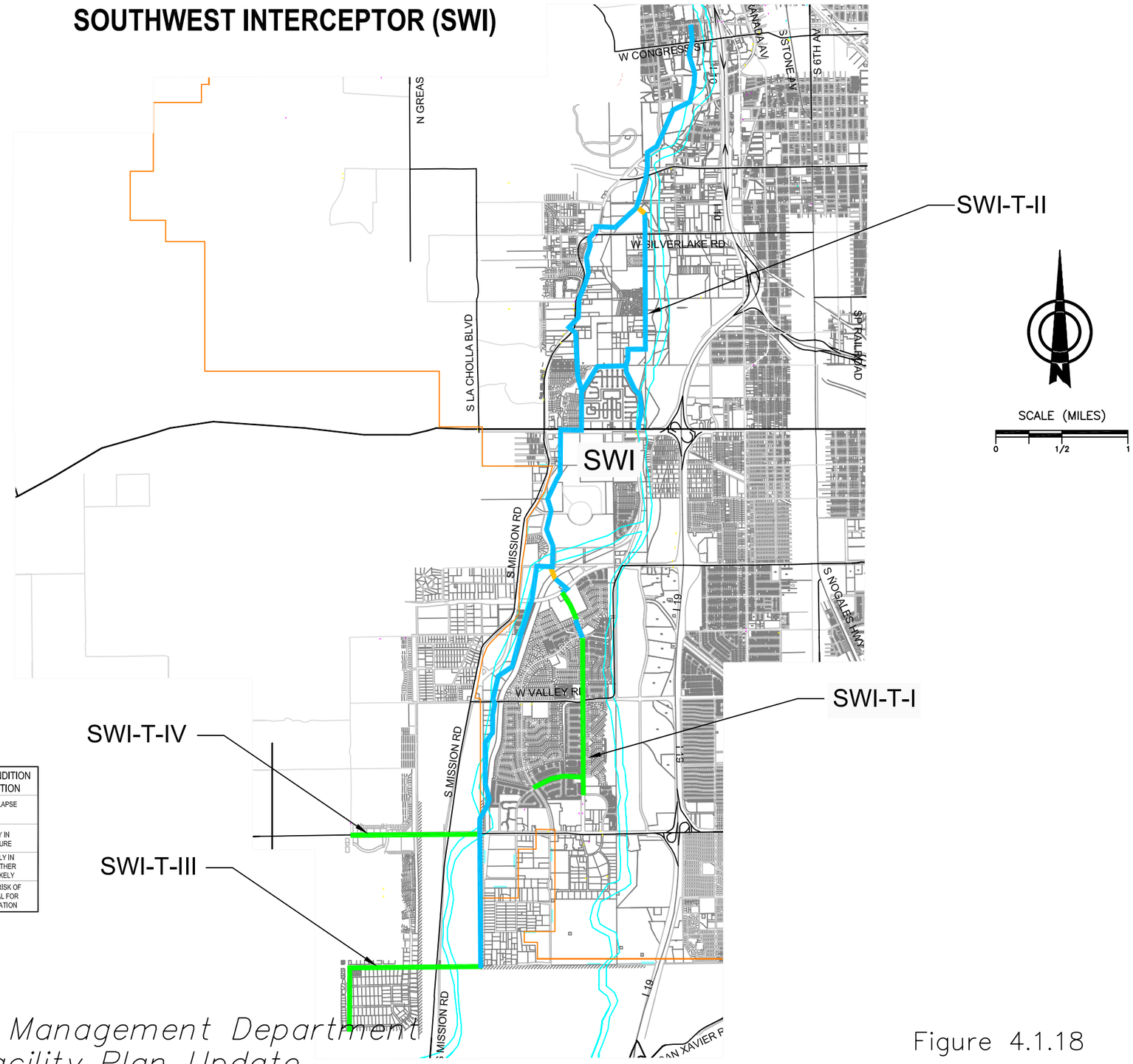

CONDITION GRADE	GRADE DESCRIPTION	DEFECT DESCRIPTION	STRUCTURAL CONDITION GRADE IMPLICATION
5	IMMEDIATE ATTENTION	SEWERS REQUIRING IMMEDIATE ATTENTION	COLLAPSED OR COLLAPSE IMMINENT
4	POOR	SEVERE DEFECTS THAT WILL BECOME GRADE 5 SEWER WITHIN THE FORSEEABLE FUTURE	COLLAPSE LIKELY IN FORSEEABLE FUTURE
3	FAIR	MODERATE DEFECTS THAT WILL CONTINUE TO DETERIORATE	COLLAPSE UNLIKELY IN NEAR FUTURE, FURTHER DETERIORATION LIKELY
2	GOOD	MINOR AND FEW MODERATE DEFECTS	MINIMAL NEAR-TERM RISK OF COLLAPSE, POTENTIAL FOR FURTHER DETERIORATION

Pima County Wastewater Management Department
Metropolitan Area Facility Plan Update

Figure 4.1.18

SOUTHWEST INTERCEPTOR (SWI)

TANQUE VERDE INTERCEPTOR (TVI)

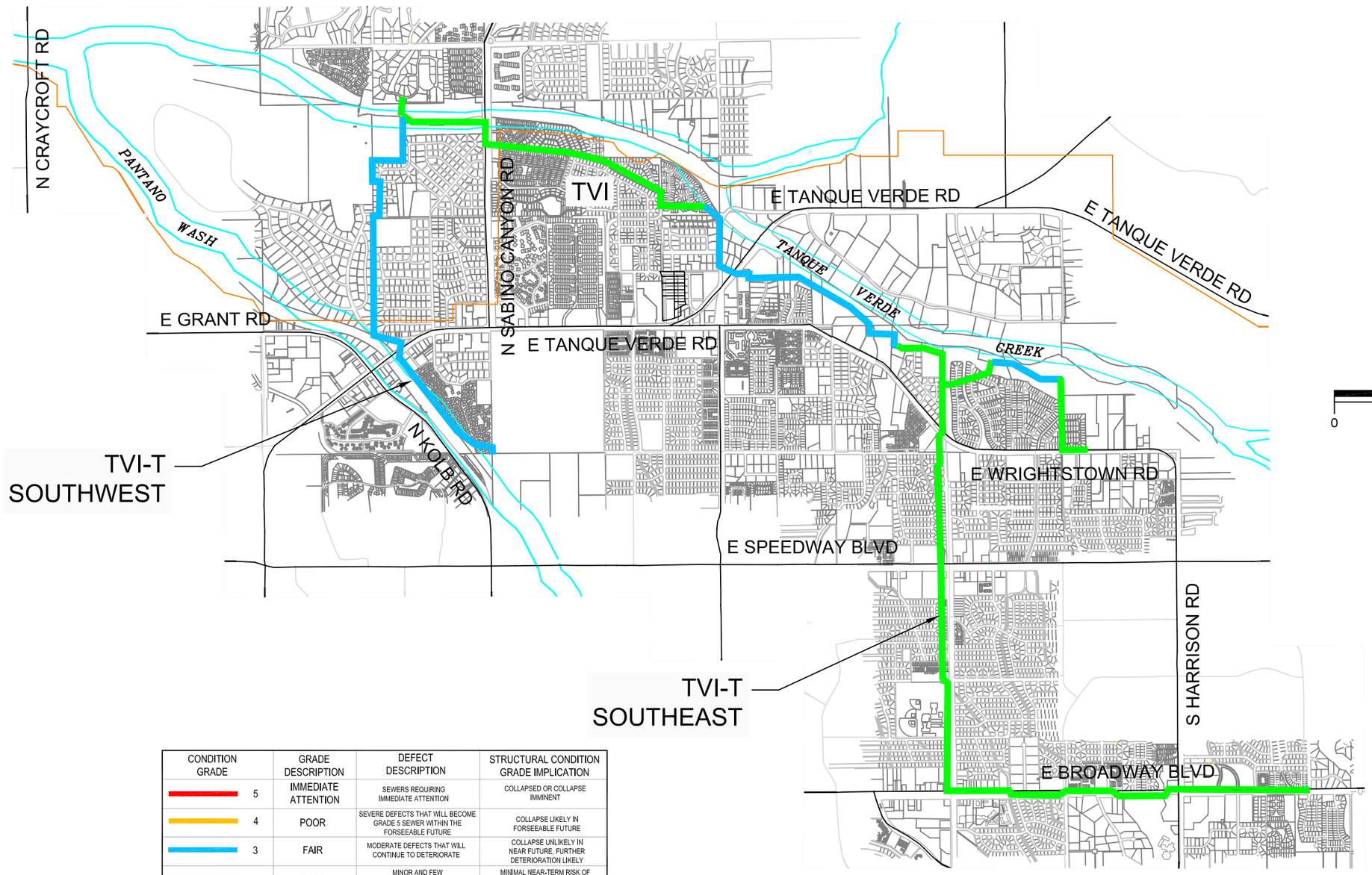

CONDITION GRADE	GRADE DESCRIPTION	DEFECT DESCRIPTION	STRUCTURAL CONDITION GRADE IMPLICATION
5	IMMEDIATE ATTENTION	SEWERS REQUIRING IMMEDIATE ATTENTION	COLLAPSED OR COLLAPSE IMMINENT
4	POOR	SEVERE DEFECTS THAT WILL BECOME GRADE 5 SEWER WITHIN THE FORSEEABLE FUTURE	COLLAPSE LIKELY IN FORSEEABLE FUTURE
3	FAIR	MODERATE DEFECTS THAT WILL CONTINUE TO DETERIORATE	COLLAPSE UNLIKELY IN NEAR FUTURE, FURTHER DETERIORATION LIKELY
2	GOOD	MINOR AND FEW MODERATE DEFECTS	MINIMAL NEAR-TERM RISK OF COLLAPSE, POTENTIAL FOR FURTHER DETERIORATION

Pima County Wastewater Management Department
Metropolitan Area Facility Plan Update

Figure 4.1.19

TANQUE VERDE INTERCEPTOR (TVI)

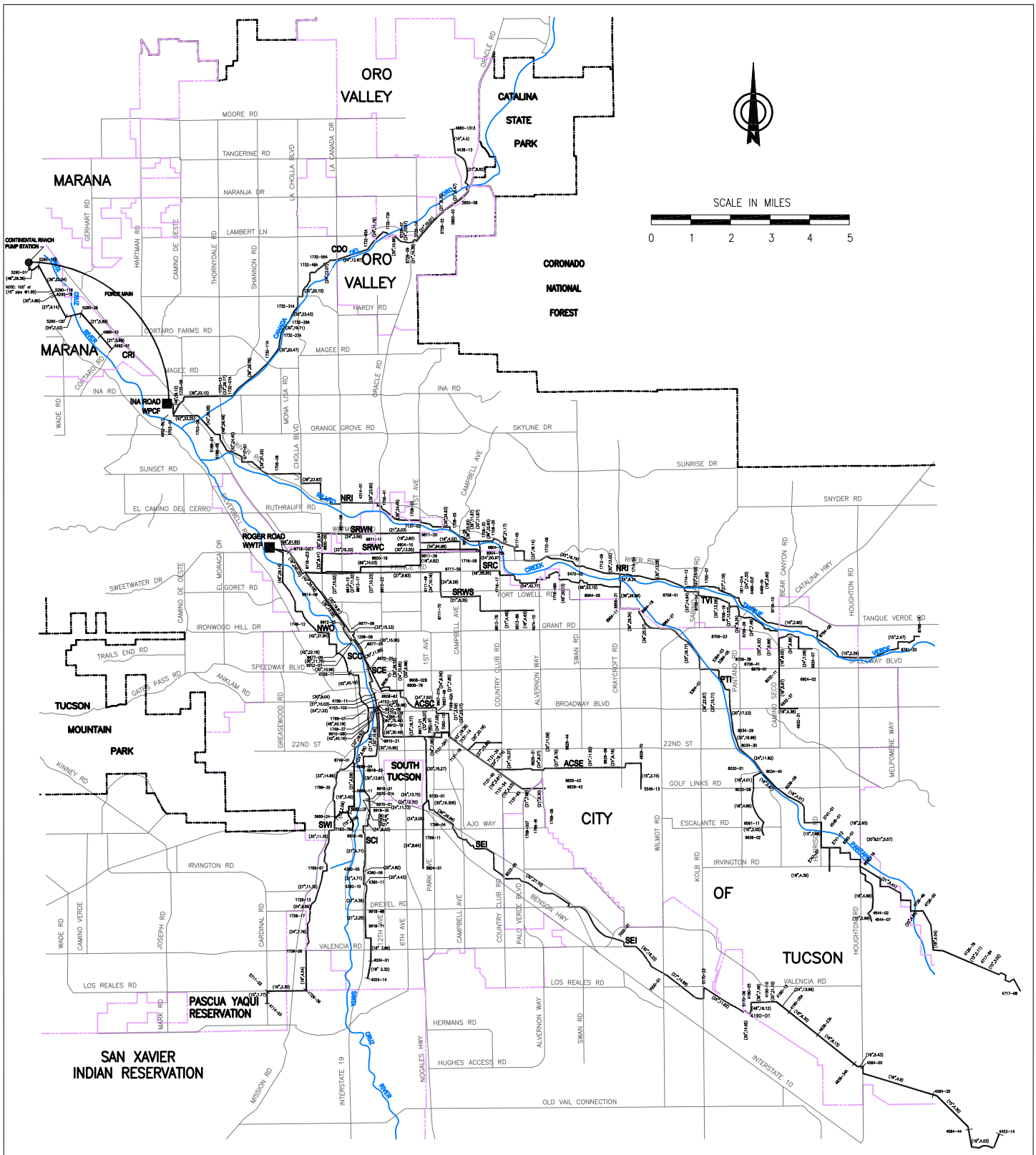

Pima County Wastewater Management Department
Facility Plan Update

Figure 4.2.1
Interceptor System with Approximate Full Pipe Capacities

SUB-CHAPTER 4.2 FUTURE CONVEYANCE

Sub-chapter 4.2 discusses the wastewater modeling effort to determine future capacity of the system.

Capacity Determination

The determination of the future capacity requirements of the existing conveyance system has been accomplished by the use of the Facility Plan Model. The Facility Plan Model's development, methods of calculation and operation are discussed in detail in Chapter 3.4. The assumptions and application of population distribution projections presented in that chapter generate the capacity demands on the conveyance system for the next 20 years that are presented in this chapter.

The configuration and capacity of the major interceptors of the PCWMD are presented in Figure 4.2.1. The map presents the routing of the Interceptors and the capacity of individual sections of the Interceptors from the Interceptor's beginning until their discharge to the Metropolitan Treatment Facilities. The identified capacity is the capacity of the pipe flowing full. The identification numbers of the manholes bracketing each significant change in pipe capacity locates significant changes in pipe capacity. As an example referring to Figure 4.2.1, the capacity and size of the North Rillito Interceptor from manhole 4314-01 to manhole 1706-08 is given in parenthesis as (39-inch, 23.93), that is 39-inch pipe diameter and 23.93 MGD full pipe capacity. The information for the remainder of the interceptors is similarly presented.

The Facility Plan Model uses PAG's Transportation Analysis Zone (TAZ) population projections to determine the population within PCWMD sewer basins. The TAZ population and the resulting sewer basin populations can be easily updated as PAG issues revised population forecasts. Likewise, sewer basin populations can be revised to reflect alternate population scenarios that are deemed by the Department to significantly affect the conveyance and treatment system capacities.

The basin populations, as explained in Section 3.4, determine the ADWF in the pipes of the conveyance system. The PDWF is obtained by multiplying the ADWF by a Peaking Factor determined from the total population upstream of the section of pipe under consideration. The Peak Wet Weather Flow (PWWF) is not calculated but accounted for by limiting the carrying capacity of the pipes to 85 percent of full pipe capacity (75 percent d/D). Wet weather flow can, from past experience, be adequately transported in the remaining 15 percent pipe area capacity.

The conveyance system capacities are shown on Figure 4.2.1. These capacities are jointly taken from information presented in the 1990 Facility Plan Update, modified by system upgrades and extensions between 1990 and the present. The values shown in Figure 4.2.1 are full pipe capacities. The Facility Plan Model compares the flows calculated to the capacity of the pipe in that basin. The program issues an alarm when the flow in the basin reaches 85 percent of the full pipe capacity of the pipe sections in the basin. The alarms are divided into two classes, RED for flows in excess of 85 percent of the full pipe capacity at the basin exit and ORANGE when flow exceeds 85 percent of the inlet capacity of the basin.

The ADWF flows for the years 2005 through 2030 are presented in Chapter 5.2 Future Treatment. These flows, although the basis for the PDWF flows presented in this chapter, are not the measure used in judging conveyance system adequacy. This section of the Facility Plan will concern itself with the future PDWF flows identified by the model for the years 2005, 2010, 2015, 2020, 2025 and 2030.

The PDWF flowchart is arranged in a hierarchical manner beginning with the interceptor basins farthest from the Metropolitan Treatment Facilities. Flows generated in the basins along the

interceptors and closer to the treatment plant are added to the flows from the upstream basins. The increasing flows are modified by the peaking factor at the entrance and exit of each succeeding basin and checked with the pipe capacity. The interceptors join their parent interceptors with flows from all upstream basins considered in the parent interceptor until the major parent interceptors' discharge to the Metropolitan Treatment Facilities. (See Figure 4.2.1)

The Facility Plan model summarizes flow on a basin-by-basin platform, assigning the entire flow generated within a basin to the interceptor at the basin's exit manhole. This variation from the real world flows enables the Facility Plan model to compare the flow at the exit from the basin to the pipe capacity at not only the basin's exit but also the basin's entrance. Interceptors within basins where the exit flow exceeds the interceptor's capacity at the basin's entrance and exit are identified on the flowcharts. The pipe capacity of the interceptor in the identified basin requires an Engineering evaluation before being certified as being deficient.

There are many opportunities for the diversion of flows within the conveyance systems tributary to the Roger Road WWTP and Ina Road WPCF. The diversions used in the model were set based upon the metered flows, in both the Conveyance System and at the plant's entrance, in the months of November and December 2004. The Facility Plan Model is flexible and can be set for a wide range of diversion possibilities. However, the 2005 diversion settings, as well as special flows from areas of unusual discharge, were consistently applied to the years 2005 through 2030 (except as noted) for ease of comparison of year-to-year results. These diversions and unusual discharges and their settings are:

1. Diversion from Roger Road WWTP to Ina Road WPCF by means of the Tucson Boulevard Flow Management Structure [from the South Rillito to the North Rillito Interceptors: (see #12)]

2005	5.35 MGD
2010	5.35 MGD
2015	0 MGD (Roger Road to Ina Road Plant Interconnect) Installed
2020	0 MGD (Roger Road to Ina Road Plant Interconnect) Installed
2025	0 MGD (Roger Road to Ina Road Plant Interconnect) Installed
2030	0 MGD (Roger Road to Ina Road Plant Interconnect) Installed

2. Slim Fast Discharge to Basin 43A: 0.00 MGD
3. Discharge from the State and Federal Prison Complex on South Wilmot Road. 0.38 MGD
4. Discharge above and beyond resident population in the University of Arizona Basin: 0.25 MGD
5. Discharge from daily work force in the Downtown Area: 0.40 MGD
6. Discharge from the Airport and Casino & Industrial daily population inflow: 0.80 MGD
7. Discharge from the Davis-Monthan AFB daily population inflow: 0.33 MGD

8. Flow removed from the system at Randolph Park WRF:

2005	0 MGD
2010	3.00 MGD
2015	3.00 MGD
2020	3.00 MGD
2025	3.00 MGD
2030	3.00 MGD

9. Flow diverted from Basin 9 discharge (Southeast Interceptor) to Basin 24 (Santa Cruz Central Interceptor) at the Alameda Siphon. (The remainder of the flow goes to the Northwest Outfall Interceptor). The Santa Cruz Prince to Franklin installed between 2005 and 2010 becomes Basin 24. The diversions from Basis 9 to Basin 24 area as follows:

2005	17 percent
2010	100 percent
2015	100 percent
2020	100 percent
2025	100 percent
2030	100 percent

10. Percentage of flow diverted from Basin 22 (Aviation Corridor Sewer- East) to Basin 4 (The Santa Cruz East interceptor): 25 percent
11. Additional discharge from Tucson Mall: 0.40 MGD
12. Roger Road WWTP to Ina Road WPCF Plant Interconnect installed between 2010 & 2015. Upon completion of the Plant Interconnect flow to the North Rillito Interceptor utilizing the Tucson Boulevard Flow Management Structure will be used only in emergencies or planned maintenance activities.

2005	0 MGD
2010	0 MGD
2015	18.66 MGD
2020	17.85 MGD
2025	17.07 MGD
2030	27.67 MGD*

* Note! Ina Road WPCF scheduled for expansion to 50 MGD in 2026.

The above principles will be covered more fully in the following discussion of the Model's findings in the years 2005, 2010, 2015, 2020, 2025 and 2030.

See the following Figure 4.2.1.

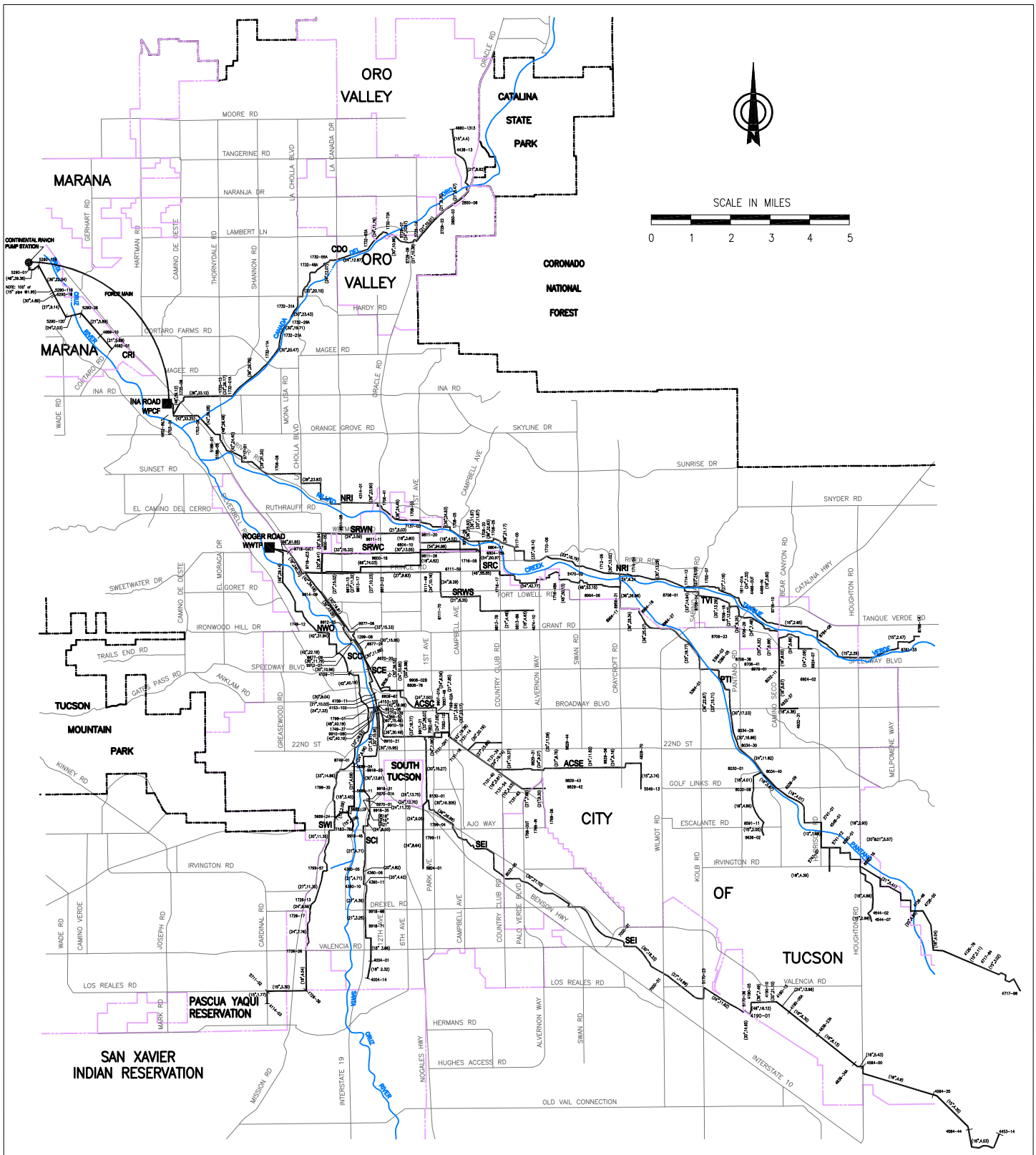

Pima County Wastewater Management Department
Facility Plan Update

Figure 4.2.1
Interceptor System with Approximate Full Pipe Capacities

2005 Model Results

The results of the Facility Plan Model's evaluation of the PCWMD's interceptor system for PDWF in the year 2005 are presented in Figures 4.2.2a. and 4.2.2b for Roger Road WWTP and Ina Road WPCF tributary systems, respectively. The sections of the system identified by the Facility Plan Model as being deficient (Red) or requiring further evaluation (Orange) for both the Roger Road WWTP and Ina Road WPCF systems are shown on Figure 4.2.2, Interceptor Capacity Analysis 2005.

Figures 4.2.2a and 4.2.2b are arranged in hierarchal order culminating at the Roger Road WWTP and Ina Road WPCF, respectively. The flows presented are PDWF. The colored circles represent the location of flow meters in the Conveyance System with the adjacent Red numbers the recorded flows. The correlation between recorded peak flows and the calculated peak flows varies widely. Several reasons are offered for these variances:

- Meter recorded peaks are more susceptible to rain events and other flow upsets while the calculated flows are based upon stable population figures. Supporting this premise is the closer agreement of the two readings as the flows increase approaching the plants.
- The calculated flows cannot mirror the effects of real world circumstances.
- The meter recordings are not all from the same types of meters. Some measure flow, some measure depth and others were temporarily set for a week or two and capable of recording unusual peaks with not sufficient data for averaging. The meters in the charts are color coded as follows:

Yellow	SCADA meters recording flow (Million gallons per day (MGD)).
Dotted Yellow	SCADA meters recording depth only (inches).
Blue	Non SCADA meters with flow from Nov-Dec 2004 (MGD).
Green	Non SCADA meters with flow from dates other than Nov-Dec 2004.

The meter's location in relation to the basins is shown on the flow chart. The meter readings are only shown on the 2005-year flow charts, as the readings recorded in 2004 have no validity for years beyond 2005.

Deficiencies Identified

The portions of the interceptors the model identifies as having deficiencies (Red), or requiring further evaluation (Orange) are shown in the color coded tables on Figures 4.2.2a for the Roger Road WWTP Tributary system and on Figure 4.2.2b for the Ina Road WPCF Tributary system. The results are graphically shown on a map of PCWMD's entire interceptor system in Figure 4.2.2. and are summarized as follows:

NOTE. Basins where both entrance and exit problems are indicated are color coded red on Figures 4.2.2 through 4.2.7.

RED (Flow greater than 85 percent of Pipe Capacity)

Roger Road WWTP System

1. Northwest Outfall (NWO) from Speedway Boulevard to the Roger Road WWTP. (Basin 57B). (The 2004 Bond Project will relieve Flow Problems on the NWO: Santa Cruz Interceptor (SCI) Prince to Franklin.)

Ina Road WPCF System

1. (None.)

ORANGE (Flow greater than basin entrance capacity. Requires further evaluation)

Roger Road WWTP System

1. Aviation Corridor Sewer Central (ACSC) Aviation/Kino diversion structure to 12th Street and Vine (Basin 4). (This condition is due to the diversion from the ACSE as basin flow at the exit is only 33 percent higher than entrance capacity.)
2. Southeast Interceptor (SEI) from Euclid and 18th Street to 17th Street and Osborne (Basin 9). (This condition is in a downstream basin whose own basin flow is not large; however, the interceptor in this basin carries all of the flow from upstream SEI.)
3. ACSE along 21st Street from Tucson Boulevard to Plumer (Basin 46).

   (This is due to the pipe slope of a section being less than 0.2%.)
4. Santa Cruz Central (SCC) from the Alameda Siphon north to Grant Road and I-10 (Basin 24). (The entrance capacity of Basin 24 is small compared to the Basin 24 exit flow. The exit flow includes the additional flow from large tributary basins joining the interceptor downstream of the Basin 24's entrance point.)
5. Southeast Interceptor (SEI) from near Houghton and Old Vail Roads west to Desert Valley Way (Basin 43A). (This is a section of 36-inch pipe at the basin's entrance that has less capacity than the basin's exit flow. This section of pipe may require augmentation.)
6. Aviation Corridor Sewer East (ACSE) from the Golf Links/Veterans Memorial siphon to Silverlake and Aviation Parkway (Basin 22). (The entrance capacity of this basin is determined by a minor trunk sewer feeding the main interceptor. The pipe in this basin requires evaluation.)
7. Santa Cruz Interceptor (SCI) from Lincoln to Drexel Road (Basin 75). (The peaking factor for this basin caused by its small population magnifies a relatively low ADWF to a significant PDWF.)
8. South Rillito Interceptor (SRI) from Glenn and Alvernon to Glenn west of Country Club (Basin 78). (PCWMD has designed a relief sewer for this problem and awaits funding for construction.)

Ina Road WPCF System

1. North Rillito Interceptor (NRI) from Oracle and River Road to Ina Road WPCF (Basin 19). (This is due to diversion of flow from the South to the North Rillito Interceptor and the limited capacity of several sections of pipe. It should be evaluated. Upon completion of the Plant Interconnect in the 2004 Bonds, this diversion will be used only for emergencies.)

See the following Figures 4.2.2 to 4.2.2b.

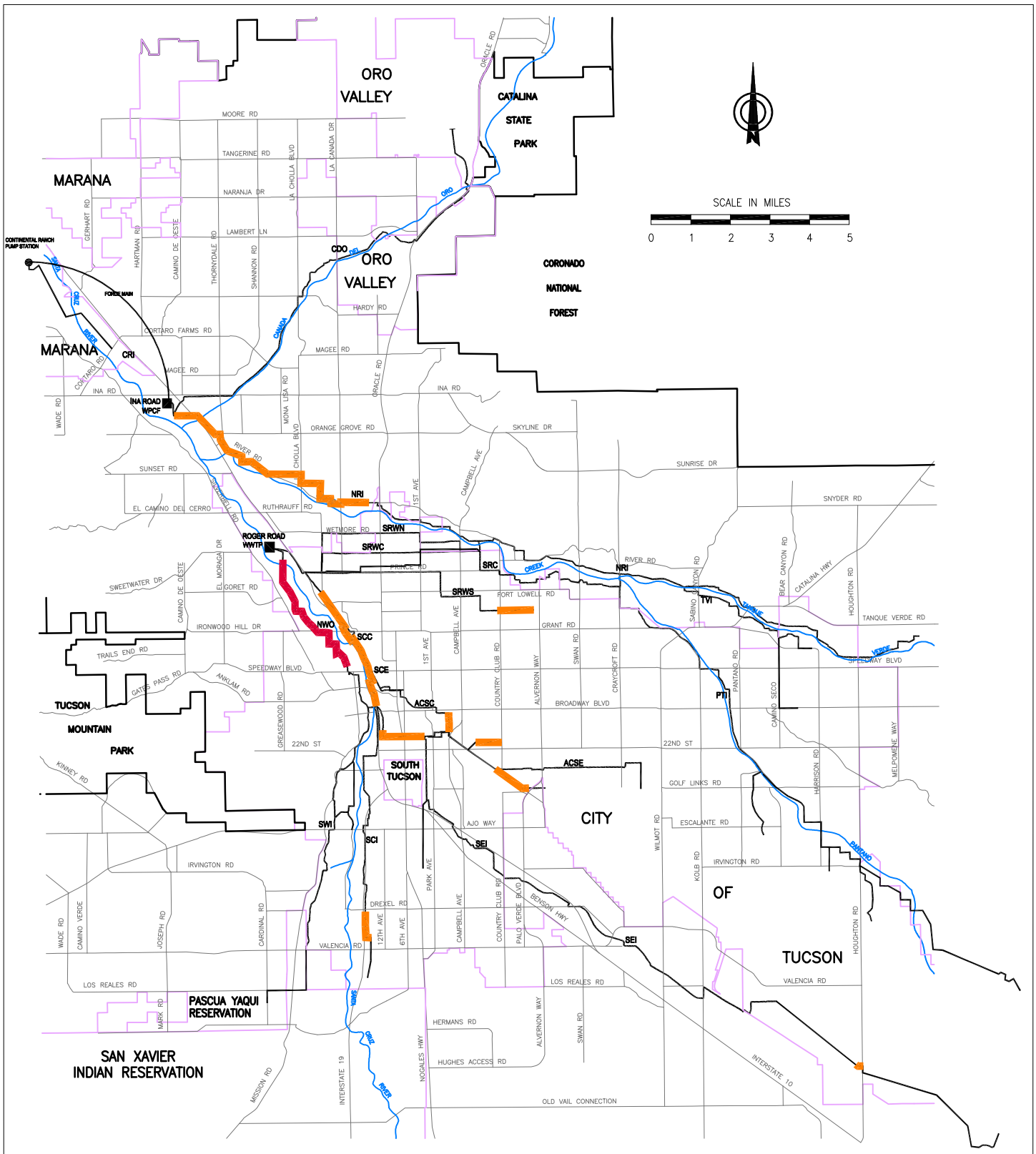

LEGEND

DEFICIENT (Calculated Basin Exit Flow is Greater Than 85% of Full Pipe Capacity at the Basin Exit)

FURTHER (Calculated Basin Inlet Flow is Greater Than 85% of Full Pipe Capacity Somewhere Within the Basin)

Pima County Wastewater Management Department
Facility Plan Update

Figure 4.2.2
Capacity Analysis 2005

2005 TAZ
ROGER
PDWF

Basin No.		Basin Population 2005	Interceptor Flow ADWF	Basin Flow ADWF	Peak Factor	PDWF mgd	CAPACITY 85% Full Pipe Capacity ENTER	CAPACITY EXIT	METERS PDWF	METERS Mtr No	Over Exit Capacity Indicator	Over Enter Capacity Indicator	
1A		5,066	2.75	0.43	1.77	**4.86**	5.93	10.11	**3.63**	**23**	5.24	1.07	##
1B		3,258	0.28	0.28	2.07	**0.57**	1.70	9.40			8.83	1.13	##
2		15,232	1.29	1.29	1.78	**2.31**	2.98	3.66	**2.26**	**2**	1.35	0.67	##
4		11,442	2.07	0.97	1.83	**3.78**	2.37	6.67	**2.05**	**27**	2.89	(1.41)	##
5A		561	20.84	0.05	1.40	**29.27**	50.80	129.12	**35.75**	**24**	99.85	21.54	##
5B		3,003	11.22	0.26	1.49	**16.67**	62.93	50.80			34.13	46.25	##
6		18,755	3.67	1.59	1.64	**6.02**	9.65	16.94	**3.15**	**6**	10.92	3.62	##
7A		4,618	6.41	0.39	1.58	**10.13**	15.95	22.92	**11.75**	**7**	12.79	5.83	##
7B		11,219	5.44	0.95	1.60	**8.69**	13.35	15.95			7.27	4.67	##
9		9,645	11.50	0.82	1.52	**17.54**	15.95	64.16	**18.25**	**31**	46.62	(1.58)	##
11		12,628	4.18	1.07	1.64	**6.85**	17.94	22.94	**7.52**	**10.00**	16.10	11.09	##
14		9,153	0.78	0.78	1.86	**1.45**	0.00	6.53			5.08	(1.45)	##
20		12,559	11.20	1.07	1.52	**17.06**	36.35	43.32	**18.75**	**40**	26.26	19.29	##
22		755	4.38	0.06	1.63	**7.13**	6.51	12.02	**7.20**	**34**	4.88	(0.62)	##
23		16,152	4.12	1.37	1.68	**6.91**	10.11	14.29	5.13	23	7.38	3.20	##
24		11,148	7.90	0.95	1.63	**12.84**	6.57	29.68	**13.75**	**28**	16.84	(6.27)	##
25A		916	2.91	0.08	1.65	**4.81**	9.97	34.16			29.35	5.16	##
25B		6,319	1.97	0.54	1.69	**3.32**	4.00	6.83	**5.15**	**25**	3.50	0.68	##
26		17,182	4.49	1.46	1.62	**7.26**	16.13	14.65			7.39	8.87	##
27A		4,475	2.53	0.38	1.74	**4.40**	7.68	12.37	**9.80**	**16**	7.97	3.29	##
27B		526	0.04	0.04	2.62	**0.12**	0.00	2.93			2.82	(0.12)	##
27C		5,167	0.44	0.44	1.97	**0.87**	0.00	3.12			2.25	(0.87)	##
29		7,447	1.36	0.63	1.78	**2.41**	3.41	4.82	**1.25**	**26**	2.41	1.00	##
30		5,532	3.03	0.47	1.67	**5.04**	10.05	10.05	**6.18**	**29**	5.01	5.01	##
31		14,072	1.20	1.20	1.80	**2.15**	0.00	3.41			1.26	(2.15)	##
32		6,707	10.74	0.57	1.49	**15.99**	79.93	62.93			46.94	63.94	##
33		10,461	2.85	0.89	1.69	**4.81**	7.79	8.81			4.00	2.97	##
36		1,606	0.14	0.14	2.24	**0.31**	0.00	1.70			1.39	(0.31)	##
42		2,596	10.13	0.22	1.53	**15.54**	45.18	42.61			27.07	29.64	##
43A		11,011	2.41	0.94	1.99	**4.79**	4.59	11.85	**5.70**	**37**	7.06	(0.20)	##
43B		4,747	0.40	0.40	1.72	**0.69**	0.00	4.17			3.47	(0.69)	##
44		3,945	0.34	0.34	2.03	**0.68**	2.31	7.15			6.47	1.63	##
45		10,981	1.33	0.93	1.83	**2.45**	3.06	13.52	**3.12**	**47**	11.07	0.61	##
46		12,436	1.46	1.06	1.76	**2.58**	2.41	3.88			1.30	(0.17)	##
48		2,160	0.18	0.18	2.17	**0.40**	0.00	1.95			1.55	(0.40)	##
49		5,840	0.50	0.50	1.95	**0.97**	0.00	3.04			2.08	(0.97)	##
51		8,148	7.40	0.69	1.58	**11.71**	12.98	12.98	**14.00**	**12**	1.27	1.27	##
53		2,639	0.22	0.22	2.12	**0.48**	0.00	1.12			0.65	(0.48)	##
54		133	0.69	0.01	1.89	**1.29**	16.01	13.70			12.41	14.72	##
56		10,251	0.87	0.87	1.85	**1.61**	0.00	2.52			0.91	(1.61)	##
57A		4,004	16.97	0.34	1.47	**24.99**	17.70	27.15			2.16	(7.29)	##
57B		9,345	17.95	0.79	1.47	**26.34**	27.15	24.77	**28.25**	**4**	(1.58)	0.80	##
57C		2,338	0.20	0.20	2.15	**0.43**	0.00	3.90			3.47	(0.43)	##
63		6,839	0.58	0.58	1.92	**1.11**	0.00	4.29			3.18	(1.11)	##
70		7,768	1.35	0.66	1.78	**2.39**	6.60	9.65			7.25	4.20	##
71		15,848	2.15	1.35	1.78	**3.82**	0.00	7.88	**3.49**	**30**	4.06	(3.82)	##
73		2,559	0.22	0.22	2.13	**0.46**	0.00	10.05			9.58	(0.46)	##
74		14,423	1.67	1.23	1.75	**2.91**	7.05	6.48			3.56	4.13	##
75		13,829	1.97	1.18	1.72	**3.38**	2.71	3.72			0.34	(0.67)	##
76		5,208	0.44	0.44	1.97	**0.87**	0.00	1.52			0.65	(0.87)	##
78		14,940	2.66	1.27	1.68	**4.47**	3.81	5.40			0.93	(0.66)	##
81		19,190	1.63	1.63	1.75	**2.85**	0.00	3.18			0.33	(2.85)	##
86		13,526	1.15	1.15	1.80	**2.07**	0.00	6.60			4.53	(2.07)	##
87		3,224	1.57	0.27	1.75	**2.75**	3.66	8.77			6.02	0.90	##
88		16,313	1.39	1.39	1.77	**2.46**	0.00	3.80			1.34	(2.46)	##
94		8,072	0.69	0.69	1.89	**1.29**	0.00	3.90			2.61	(1.29)	##
95		9,293	0.79	0.79	1.86	**1.47**	0.00	2.71			1.24	(1.47)	##
97		7,941	0.67	0.67	1.89	**1.28**	0.00	7.81			6.53	(1.28)	##
99		0	38.92	0.00	1.40	**54.65**	78.20	78.20			23.55	23.55	##
111		8,576	0.73	0.73	1.88	**1.37**	0.00	5.29			3.92	(1.37)	##
113		8,544	0.73	0.73	1.88	**1.36**	0.00	3.94	**0.37**	**11**	2.57	(1.36)	##
114		4,767	0.41	0.41	1.99	**0.81**	0.00	1.09			0.28	(0.81)	##
20A				5.35	1.17	**6.26**			**6.27**	**20**			##

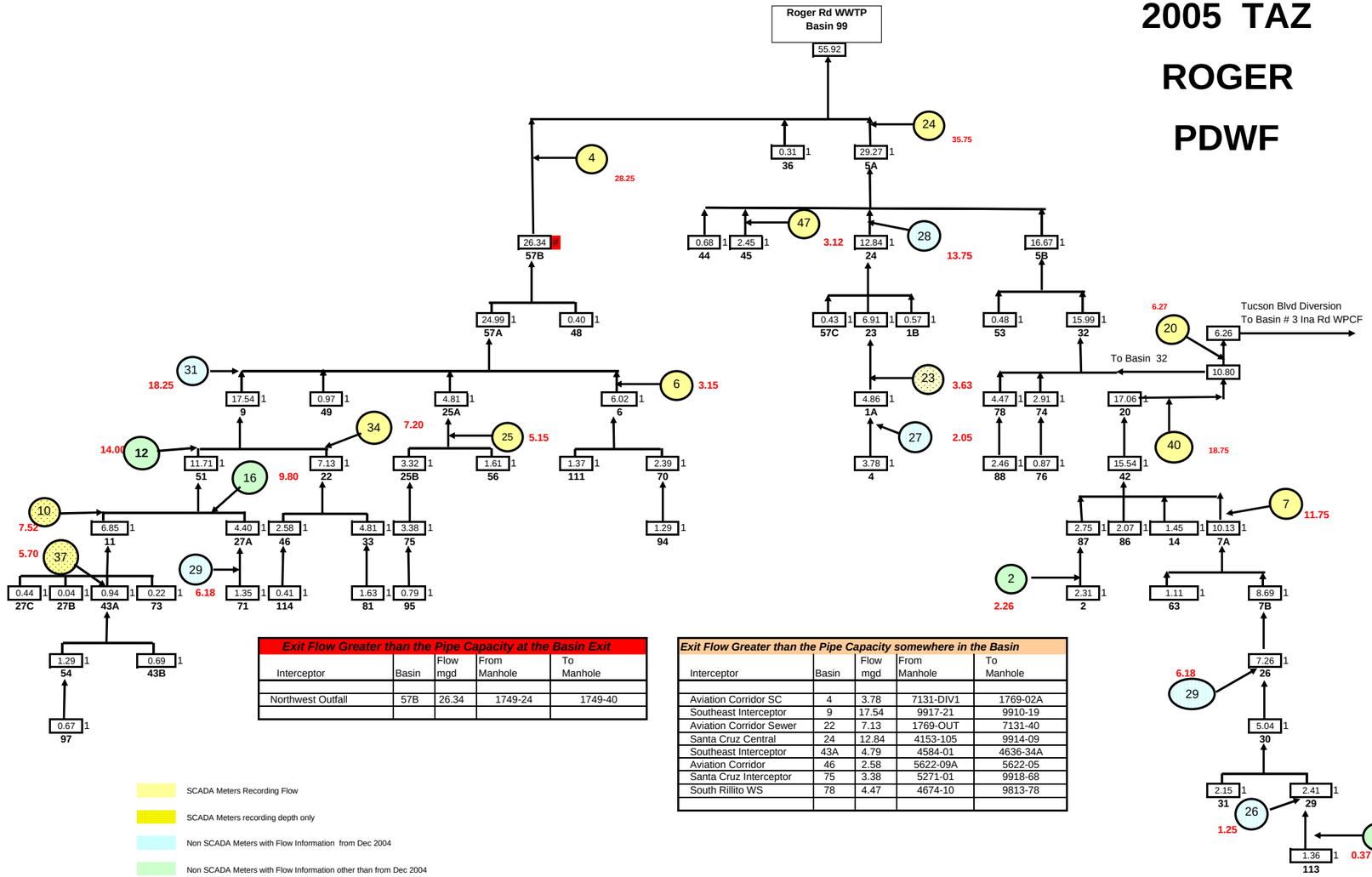

Exit Flow Greater than the Pipe Capacity at the Basin Exit				
Interceptor	Basin	Flow mgd	From Manhole	To Manhole
Northwest Outfall	57B	26.34	1749-24	1749-40

Exit Flow Greater than the Pipe Capacity somewhere in the Basin				
Interceptor	Basin	Flow mgd	From Manhole	To Manhole
Aviation Corridor SC	4	3.78	7131-DIV1	1769-02A
Southeast Interceptor	9	17.54	9917-21	9910-19
Aviation Corridor Sewer	22	7.13	1769-OUT	7131-40
Santa Cruz Central	24	12.84	4153-105	9914-09
Southeast Interceptor	43A	4.79	4584-01	4636-34A
Aviation Corridor	46	2.58	5622-09A	5622-05
Santa Cruz Interceptor	75	3.38	5271-01	9918-68
South Rillito WS	78	4.47	4674-10	9813-78

SCADA Meters Recording Flow

SCADA Meters recording depth only

Non SCADA Meters with Flow Information from Dec 2004

Non SCADA Meters with Flow Information other than from Dec 2004

Figure 4.2.2a

Peak Dry Weather Flow (PDWF)

Roger Road Tributary System

TAZ 2005

3/15/05 10:30am

2005 TAZ

INA

PDWF

Basin No	Basin Population on Sewer 2005	Interceptor Flow **ADWF**	Basin Flow **ADWF**	**Peak Factor**	**PDWF** mgd	**CAPACITY** 85% Full Pipe Capacity ENTER	EXIT	**METERS** PDWF	Mtr. No	**Over Exit Capacity Indicator**	**Over Entrance Capacity Indicator**	
3	12,367	12.25	0.87	1.55	**19.03**	22.04	20.33			1.30	3.01	##
8	8,720	6.43	0.78	1.58	**10.17**	17.09	33.25	**11.47**	**8**	23.08	6.91	##
10	8,977	1.20	0.81	1.80	**2.16**	3.37	5.79			3.62	1.21	##
13	12,487	5.67	0.87	1.57	**8.93**	0.00	27.74			18.81	(8.93)	##
15	8,125	2.50	0.57	1.67	**4.18**	12.06	11.30			7.12	7.88	##
16	7,660	1.00	0.54	1.81	**1.80**	3.69	4.69			2.89	1.89	##
17	6,206	1.49	0.53	1.76	**2.62**	4.17	32.62	**1.93**	**39**	30.00	1.55	##
18	9,361	2.68	0.80	1.68	**4.50**	7.50	17.09	**4.19**	**14**	12.58	2.99	##
19	16,019	14.33	1.12	1.53	**21.89**	20.34	28.26	**23.00**	**19**	6.38	(1.55)	##
20	0	5.35	5.35	1.17	**6.26**	9.18	17.48			11.22	2.92	##
21A	3,322	4.80	0.22	1.59	**7.64**	11.30	11.30	**6.27**	**20**	3.66	3.66	##
21B	1,910	1.94	0.13	1.70	**3.30**	7.82	7.63	**10.60**	**21**	4.34	4.52	##
28	6,693	0.54	0.54	1.92	**1.03**	0.00	3.17	**0.91**	**13**	2.14	(1.03)	##
34	11,507	0.81	0.81	1.83	**1.47**	0.00	6.57	**2.04**	**1**	5.10	(1.47)	##
35	16,862	2.08	1.18	1.69	**3.51**	5.08	6.36			2.85	1.57	##
39	4,188	0.36	0.36	2.02	**0.72**	0.00	3.55	**18.40**	**3**	2.84	(0.72)	##
50	6,370	0.54	0.54	1.93	**1.05**	0.00	4.32			3.27	(1.05)	##
52	15	0.00	0.00	6.06	**0.01**	0.00	0.43			0.43	(0.01)	##
59	6,044	1.11	0.54	1.81	**2.01**	12.02	4.36			2.35	10.01	##
60	4,380	0.67	0.37	1.89	**1.26**	2.52	3.73			2.47	1.25	##
61	9,115	0.64	0.64	1.86	**1.19**	0.00	3.71			2.52	(1.19)	##
69	6,266	0.71	0.56	1.89	**1.34**	2.77	10.00			8.66	1.43	##
77	3,109	0.22	0.22	2.08	**0.45**	0.00	2.52			2.06	(0.45)	##
79	8,684	0.61	0.61	1.87	**1.14**	0.00	6.48			5.34	(1.14)	##
80	5,416	0.46	0.46	1.96	**0.90**	0.00	2.52			1.61	(0.90)	##
82	4,546	0.32	0.32	2.00	**0.64**	0.00	1.74			1.11	(0.64)	##
84	3,466	0.29	0.29	2.06	**0.61**	0.00	4.20			3.59	(0.61)	##
85	5,942	0.51	0.51	1.94	**0.98**	0.00	6.16			5.18	(0.98)	##
89	1,067	0.07	0.07	2.36	**0.18**	0.00	4.01			3.84	(0.18)	##
92	4,338	0.39	0.39	2.01	**0.78**	0.00	1.47			0.69	(0.78)	##
93	6,655	0.57	0.57	1.92	**1.09**	0.00	8.73			7.64	(1.09)	##
96	1,713	0.15	0.15	2.23	**0.32**	0.00	1.85			1.53	(0.32)	##
102	3,056	0.26	0.26	2.09	**0.54**	0.00	3.01			2.47	(0.54)	##
103	1,986	0.17	0.17	2.19	**0.37**	0.00	2.46			2.09	(0.37)	##
109	1,319	0.12	0.12	2.30	**0.27**	0.00	3.17			2.90	(0.27)	##
100	0	22.25	0.00	1.48	**32.82**							##

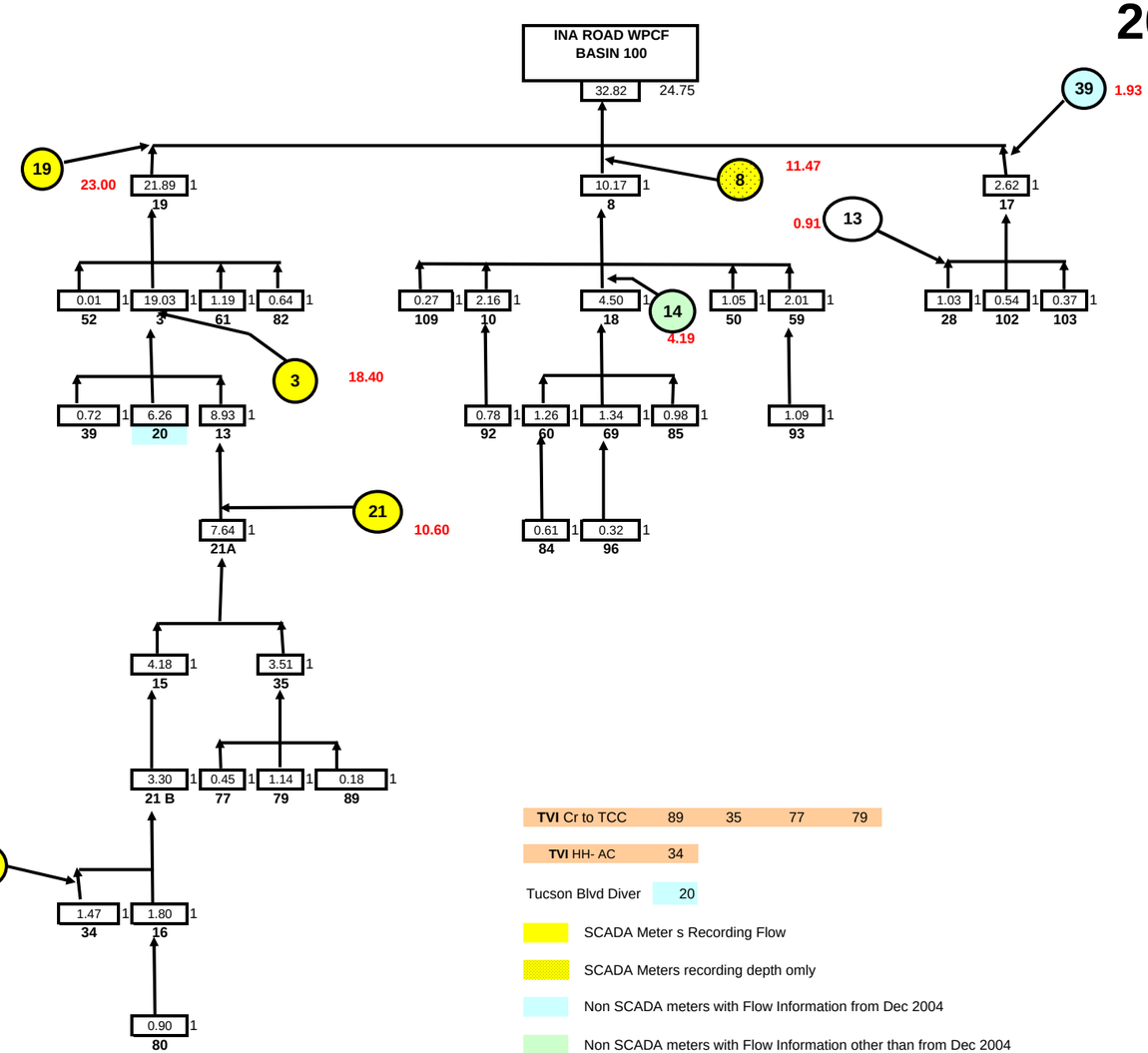

TVI Cr to TCC	89	35	77	79
TVI HH- AC	34			
Tucson Blvd Diver	20			

SCADA Meter s Recording Flow

SCADA Meters recording depth omly

Non SCADA meters with Flow Information from Dec 2004

Non SCADA meters with Flow Information other than from Dec 2004

Exit flow greater than the Pipe Capacity at the Basin Exit				
Interceptor	Basin	Flow mgd	From Manhole	To Manhole

Exit flow greater than the Pipe Capacity somewhere in the Basin				
Interceptor	Basin	Flow mgd	From Manhole	To Manhole
North Rillito Interceptor	19	21.89	1706-36	1703-06

Figure 4.2.2b

Peak Dry Weather Flow (PDWF)

Ina Road WPCF Tributary System

TAZ 2005

2010 Model Results

The results of the model's evaluation of the PCWMD's interceptor system for PDWF in the year 2010 are presented in Figures 4.2.3a. and 4.2.3b for Roger Road WWTP and Ina Road WPCF tributary systems, respectively. The sections of the system identified by the Facility Plan Model as being deficient (Red) or requiring further evaluation (Orange) for both the Roger Road WWTP and Ina Road WPCF systems are shown on Figure 4.2.3, Interceptor Capacity Analysis 2010.

In the period from 2005-2010 the Randolph Park WRF is placed in service at 3.0 MGD capacity. Also, the Santa Cruz Interceptor, Prince to Franklin (SCIPF) project is placed in service. The model considers the SCIPF replaces the Santa Cruz Central thereby increasing the capacity of Basin 24 at 75 percent d/D to 64.16 MGD. Basin 25A, the Santa Cruz Interceptor is directed to the SCIPF (Basin 24). Similarly, the Southeast Interceptor Flow (Basin 9) is 100 percent directed to the SCIPF (Basin 24). The redirection of Basin 9 and 25A relieve flow to the Northwest Outfall.

The Randolph Park WRF is now in service. 3.0 MGD is diverted from Basin 22 to the Randolph WRF reducing the exit flow to a value below the entrance capacity of Basin 22.

The portions of the Interceptors in 2010 that the Facility Plan Model identifies as having deficiencies (Red) or requiring further evaluation (Orange) are shown in the color coded tables on Figures 4.2.3a for the Roger Road Tributary system and on Figure 4.2.32b for the Ina Road Tributary system. The results are graphically shown on a map of PCWMD's entire Interceptor system in Figure 4.2.3. The unique results for 2010 are presented in the following narrative; however, the sections of the Interceptors found deficient (Red) and requiring evaluation, (Orange) in 2005 will, barring corrective action, be problems in 2010. The following narrative will, unless noted, limit itself to newly identified reaches of Interceptor or reaches that move from requiring evaluation to deficient. Reaches of interceptor found to have problems (either deficient or requiring evaluation) in prior years are considered to not have been repaired and still pose problems in this and future years. The results are:

Deficiencies noted

Red (Flow greater than 85 percent of Pipe Capacity)

Roger Road WWTP System

1. (From 2005) Northwest Outfall ceases to be a capacity problem as flow is re-directed to the SCIPF (Basin 57B).
2. SEI from Park & I-10 to 18th street and Euclid Avenue (Basin 51). (The condition is due to growth in Vail, Houghton Road, the Wilmot prison complex, Rita Ranch and the Airport Area. Solution is either enlarge sewer from Park & I-10 to 18th and Osborne or build a Water Reclamation Facility in the area.)

Ina Road WPCF System

1. No new problems.

ORANGE (Flow greater than basin entrance capacity. Requires further evaluation)

Roger Road WWTP System

1. (From 2005) Northwest Outfall ceases to be a capacity problem as flow is re-directed to the SCIPF (Basin 57B).
2. (From 2005) Santa Cruz Central ceases to be a capacity problem as flow is re-directed to the SCIPF (Basin 51).

3 (From 2005) Aviation Corridor Sewer East (ACSE) along 21 Street from Tucson Boulevard to Plumer (Basin 46). (This is due to the pipe slope of a section being less than 0.2%.)

4 Pantano Interceptor from Stella Road and the Pantano Wash to Doral Drive and the Pantano Wash (Basin 29). (The 18" pipe capacity at the basin entrance noted on Fig 4.2.1 is less than the flow at the basin exit.)

5. SEI at Old Vail Road near I-10 (Basin 43A). (This is a section of 36-inch pipe at the basin's entrance that has less capacity than the basin's exit flow. This section of pipe may require augmentation.)

6. SEI from Park & I-10 to 18th Street and Euclid Avenue. (The appearance of this section of Interceptor in both the RED & ORANGE problem areas indicates the projected flow is greater than the pipe capacity at the entrance and the exit to this basin condition.)

Ina Road WPCF System

1. No new problems.

See the following Figures 4.2.3 TO 4.2.3b.

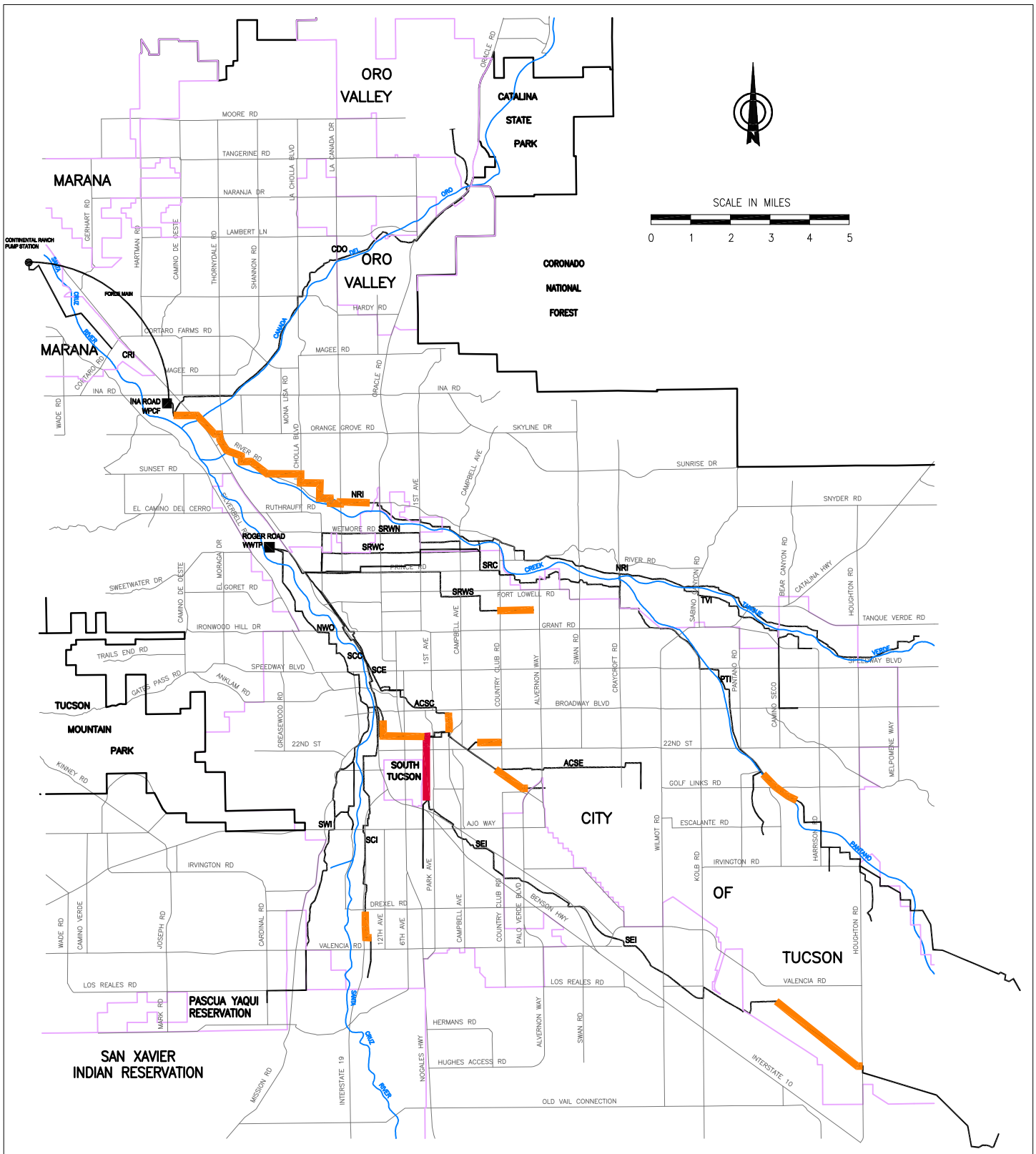

LEGEND

- DEFICIENT (Calculated Basin Exit Flow is Greater Than 85% of Full Pipe Capacity at the Basin Exit)
- FURTHER (Calculated Basin Inlet Flow is Greater Than 85% of Full Pipe Capacity Somewhere Within the Basin)

NOTE

1.) The Santa Cruz Interceptor, Prince to Franklin has been constructed between 2005 and 2010 relieving The Santa Cruz Central and the Northwest Outfall.

2.) Randolph Park WRF is placed in service between 2005 and 2010.

Pima County Wastewater Management Department
Facility Plan Update

Figure 4.2.3
Capacity Analysis 2010

2010 TAZ

ROGER

PDWF

Basin No.		Basin Population on sewer 2010	Interceptor Flow **ADWF**	Basin Flow **ADWF**	**Peak Factor**	**PDWF** mgd	**CAPACITY** 85% Full Pipe Capacity ENTER	EXIT	**Over Exit Capacity Indicator**	**Over Enterance Capacity Indicator**	
1A		5,448	2.05	0.46	1.77	**3.61**	5.93	10.11	6.49	2.32	##
1B		3,931	0.33	0.33	2.03	**0.68**	1.70	9.40	8.72	1.02	##
2		15,279	1.30	1.30	1.78	**2.31**	2.98	3.66	1.34	0.66	##
4		11,476	1.33	0.98	1.83	**2.44**	2.37	6.67	4.24	(0.06)	##
5A		574	33.51	0.05	1.40	**46.85**	204.20	52.32	5.47	157.35	##
5B		3,038	12.33	0.26	1.48	**18.24**	62.93	50.80	32.56	44.69	##
6		20,122	3.90	1.71	1.63	**6.38**	9.65	16.94	10.56	3.27	##
7A		4,704	7.39	0.40	1.56	**11.56**	15.95	22.92	11.35	4.39	##
7B		11,309	6.41	0.96	1.58	**10.12**	13.35	15.95	5.84	3.23	##
9		10,058	11.12	0.85	1.51	**16.77**	15.95	64.16	47.38	(0.82)	##
11		15,246	5.86	1.30	1.60	**9.35**	17.94	22.94	13.59	8.59	##
14		9,208	0.78	0.78	1.86	**1.46**	0.00	6.53	5.07	(1.46)	##
20		12,844	12.24	1.09	1.51	**18.55**	36.35	43.32	24.78	17.81	##
22		766	1.43	0.07	1.63	**2.33**	6.51	12.02	9.69	4.18	##
23		16,396	3.44	1.39	1.67	**5.76**	10.11	14.29	8.53	4.35	##
24		11,330	19.45	0.96	1.62	**31.55**	64.16	64.16	32.61	32.61	##
25A		1,127	2.99	0.10	1.65	**4.92**	9.97	34.16	29.24	5.05	##
25B		6,496	2.01	0.55	1.69	**3.39**	4.00	6.83	3.44	0.62	##
26		17,519	5.45	1.49	1.60	**8.70**	16.13	14.65	5.95	7.44	##
27A		4,551	2.60	0.39	1.73	**4.51**	7.68	12.37	7.85	3.17	##
27B		538	0.05	0.05	2.61	**0.12**	0.00	2.93	2.82	(0.12)	##
27C		5,548	0.47	0.47	1.96	**0.92**	0.00	3.12	2.20	(0.92)	##
29		7,625	2.27	0.65	1.70	**3.87**	3.41	4.82	0.95	(0.46)	##
30		5,601	3.96	0.48	1.63	**6.46**	10.05	10.05	3.59	3.59	##
31		14,230	1.21	1.21	1.79	**2.17**	0.00	3.41	1.24	(2.17)	##
32		6,797	11.85	0.58	1.48	**17.56**	79.93	62.93	45.37	62.37	##
33		10,605	2.88	0.90	1.69	**4.86**	7.79	8.81	3.95	2.92	##
36		1,948	0.17	0.17	2.19	**0.36**	0.00	1.70	1.34	(0.36)	##
42		2,842	11.15	0.24	1.52	**17.00**	45.18	42.61	25.61	28.18	##
43A		14,358	3.80	1.22	1.80	**6.83**	4.59	11.85	5.02	(2.24)	##
43B		13,730	1.17	1.17	1.65	**1.93**	0.00	4.17	2.24	(1.93)	##
44		3,965	0.34	0.34	2.03	**0.68**	2.31	7.15	6.47	1.63	##
45		11,148	1.35	0.95	1.83	**2.47**	3.06	13.52	11.05	0.59	##
46		12,653	1.48	1.08	1.76	**2.61**	2.41	3.88	1.27	(0.20)	##
48		2,515	0.21	0.21	2.13	**0.46**	0.00	1.95	1.49	(0.46)	##
49		6,474	0.55	0.55	1.93	**1.06**	0.00	3.04	1.98	(1.06)	##
51		8,582	9.19	0.73	1.56	**14.30**	12.98	12.98	-1.32	(1.32)	##
53		2,650	0.23	0.23	2.12	**0.48**	0.00	1.12	0.64	(0.48)	##
54		149	1.03	0.01	1.82	**1.87**	16.01	13.70	11.83	14.14	##
56		10,404	0.88	0.88	1.84	**1.63**	0.00	2.52	0.89	(1.63)	##
57A		4,063	4.80	0.35	1.46	**7.02**	17.70	27.15	20.13	10.68	##
57B		9,850	5.85	0.84	1.46	**8.53**	27.15	24.77	16.24	18.62	##
57C		2,483	0.21	0.21	2.13	**0.45**	0.00	3.90	3.45	(0.45)	##
63		6,880	0.58	0.58	1.92	**1.12**	0.00	4.29	3.17	(1.12)	##
70		7,962	1.44	0.68	1.77	**2.55**	6.60	9.65	7.10	4.05	##
71		16,650	2.22	1.42	1.77	**3.92**	0.00	7.88	3.96	(3.92)	##
73		2,940	0.25	0.25	2.09	**0.52**	0.00	10.05	9.52	(0.52)	##
74		14,779	1.71	1.26	1.74	**2.97**	7.05	6.48	3.51	4.08	##
75		14,106	2.01	1.20	1.72	**3.45**	2.71	3.72	0.27	(0.74)	##
76		5,283	0.45	0.45	1.97	**0.88**	0.00	1.52	0.64	(0.88)	##
78		14,975	2.67	1.27	1.68	**4.49**	3.81	5.40	0.91	(0.68)	##
81		19,422	1.65	1.65	1.75	**2.88**	0.00	3.18	0.30	(2.88)	##
86		13,657	1.16	1.16	1.80	**2.09**	0.00	6.60	4.51	(2.09)	##
87		3,248	1.57	0.28	1.75	**2.76**	3.66	8.77	6.01	0.89	##
88		16,428	1.40	1.40	1.77	**2.47**	0.00	3.80	1.33	(2.47)	##
94		9,025	0.77	0.77	1.87	**1.43**	0.00	3.90	2.47	(1.43)	##
95		9,503	0.81	0.81	1.86	**1.50**	0.00	2.71	1.21	(1.50)	##
97		11,941	1.01	1.01	1.82	**1.85**	0.00	7.81	5.96	(1.85)	##
99		0	39.53	0.00	1.40	**55.25**	78.20	78.20	22.95	22.95	##
111		8,817	0.75	0.75	1.87	**1.40**	0.00	5.29	3.89	(1.40)	##
113		19,096	1.62	1.62	1.75	**2.84**	0.00	3.94	1.10	(2.84)	##
114		4,769	0.41	0.41	1.99	**0.81**	0.00	1.09	0.28	(0.81)	##
20A				5.35	1.17	**6.26**					##

1 The Santa Cruz Interceptor, Prince to Franklin (SCIPF) was constructed between 2005 and 2010. This effects Basin 24. The basin exit capacity at 75% d/D is 64.16 a minimum value for this section of sewer.

2 After installation of the Santa Cruz Interceptor, Prince to Franklin (SCIPF) all of the flow from the Southeast Interceptor (Basin 9) and the Santa Cruz Interceptor (basin 25) will flow through SCIPF (Basin 24) to Basin 5A at Prince Road.

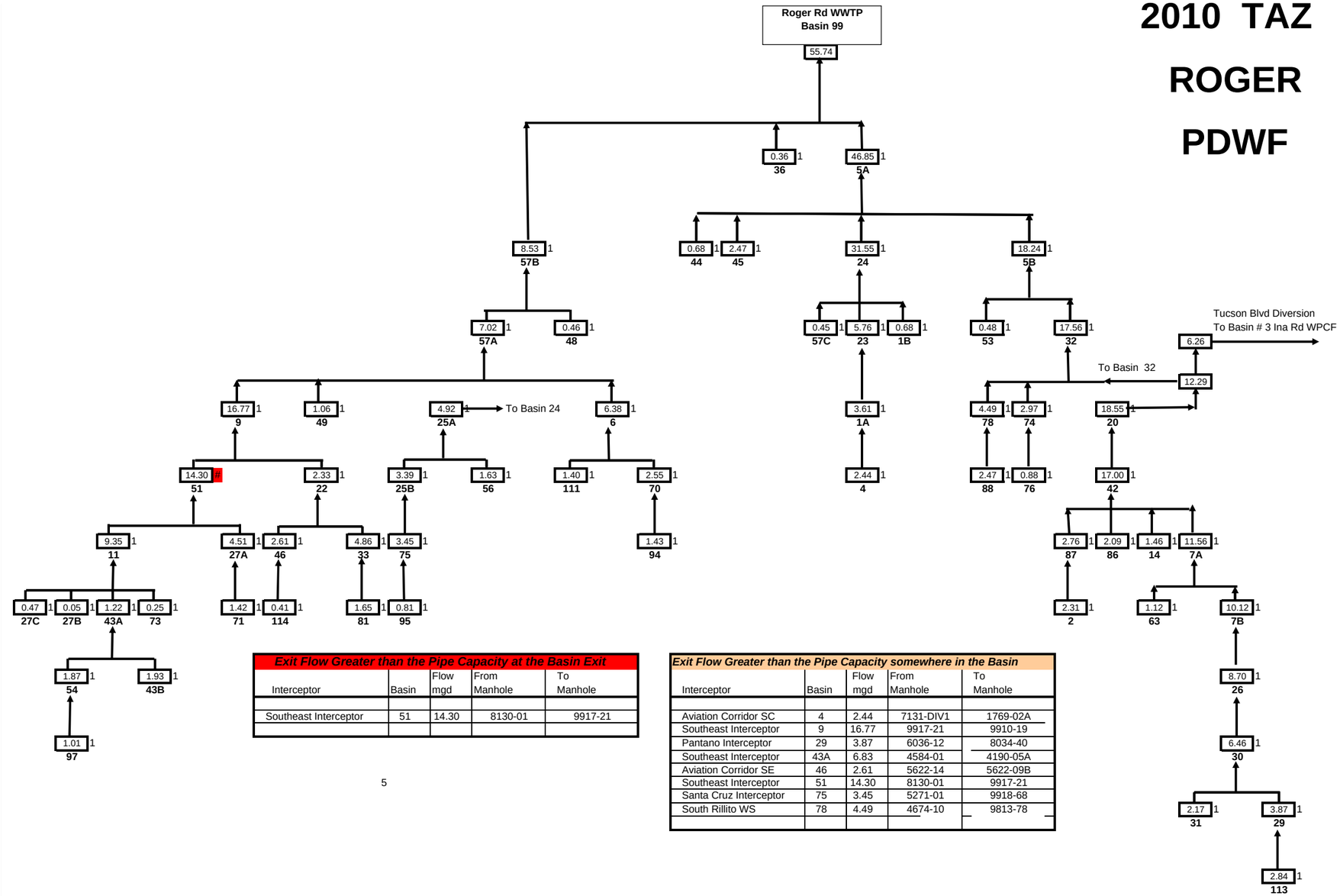

Exit Flow Greater than the Pipe Capacity at the Basin Exit				
Interceptor	Basin	Flow mgd	From Manhole	To Manhole
Southeast Interceptor	51	14.30	8130-01	9917-21

Exit Flow Greater than the Pipe Capacity somewhere in the Basin				
Interceptor	Basin	Flow mgd	From Manhole	To Manhole
Aviation Corridor SC	4	2.44	7131-DIV1	1769-02A
Southeast Interceptor	9	16.77	9917-21	9910-19
Pantano Interceptor	29	3.87	6036-12	8034-40
Southeast Interceptor	43A	6.83	4584-01	4190-05A
Aviation Corridor SE	46	2.61	5622-14	5622-09B
Southeast Interceptor	51	14.30	8130-01	9917-21
Santa Cruz Interceptor	75	3.45	5271-01	9918-68
South Rillito WS	78	4.49	4674-10	9813-78

Figure 4.2.3a

Peak Dry Weather Flow (PDWF)

Roger Road Tributary System

TAZ 2010

1/20/06 11:30 am

Basin No	Basin Population on sewer 2010	Interceptor Flow **ADWF**	Basin Flow **ADWF**	**Peak Factor**	**PDWF** mgd	**CAPACITY** 85% Full Pipe Capacity ENTER	EXIT	**Over Exit Capacity Indicator**	**Over Entrance Capacity Indicator**	
3	12,935	12.48	0.91	1.55	**19.35**	22.04	20.33	0.98	2.69	##
8	9,334	6.95	0.84	1.57	**10.94**	17.09	33.25	22.31	6.14	##
10	9,087	1.21	0.82	1.80	**2.19**	3.37	5.79	3.60	1.19	##
13	12,985	5.85	0.91	1.57	**9.18**	0.00	27.74	18.56	(9.18)	##
15	8,302	2.59	0.58	1.66	**4.31**	12.06	11.30	6.98	7.75	##
16	7,742	1.02	0.54	1.80	**1.84**	3.69	4.69	2.85	1.85	##
17	7,690	1.73	0.65	1.74	**3.00**	4.17	32.62	29.62	1.17	##
18	9,755	2.96	0.83	1.67	**4.93**	7.50	17.09	12.15	2.56	##
19	16,838	14.65	1.18	1.52	**22.33**	20.34	28.26	5.93	(1.99)	##
20	0	5.35	5.35	1.17	**6.26**	9.18	17.48	11.22	2.92	##
21A	3,403	4.94	0.22	1.59	**7.84**	11.30	11.30	3.45	3.45	##
21B	1,953	2.01	0.14	1.70	**3.41**	7.82	7.63	4.22	4.41	##
28	7,150	0.57	0.57	1.91	**1.09**	0.00	3.17	2.08	(1.09)	##
34	12,208	0.85	0.85	1.82	**1.55**	0.00	6.57	5.02	(1.55)	##
35	17,215	2.13	1.21	1.69	**3.59**	5.08	6.36	2.77	1.50	##
39	4,437	0.38	0.38	2.00	**0.76**	0.00	3.55	2.80	(0.76)	##
50	7,618	0.65	0.65	1.90	**1.23**	0.00	4.32	3.09	(1.23)	##
52	15	0.00	0.00	6.06	**0.01**	0.00	0.43	0.43	(0.01)	##
59	6,102	1.17	0.55	1.80	**2.11**	12.02	4.36	2.25	9.91	##
60	4,566	0.73	0.39	1.87	**1.37**	2.52	3.73	2.36	1.15	##
61	9,549	0.67	0.67	1.86	**1.24**	0.00	3.71	2.47	(1.24)	##
69	7,437	0.82	0.67	1.86	**1.53**	2.77	10.00	8.47	1.24	##
77	3,117	0.22	0.22	2.08	**0.45**	0.00	2.52	2.06	(0.45)	##
79	8,982	0.63	0.63	1.87	**1.17**	0.00	6.48	5.30	(1.17)	##
80	5,610	0.48	0.48	1.96	**0.93**	0.00	2.52	1.58	(0.93)	##
82	4,613	0.32	0.32	2.00	**0.64**	0.00	1.74	1.10	(0.64)	##
84	4,030	0.34	0.34	2.02	**0.69**	0.00	4.20	3.51	(0.69)	##
85	6,768	0.58	0.58	1.92	**1.10**	0.00	6.16	5.06	(1.10)	##
89	1,070	0.07	0.07	2.36	**0.18**	0.00	4.01	3.84	(0.18)	##
92	4,388	0.39	0.39	2.01	**0.79**	0.00	1.47	0.68	(0.79)	##
93	7,315	0.62	0.62	1.90	**1.18**	0.00	8.73	7.55	(1.18)	##
96	1,773	0.15	0.15	2.22	**0.33**	0.00	1.85	1.52	(0.33)	##
102	3,489	0.30	0.30	2.06	**0.61**	0.00	3.01	2.40	(0.61)	##
103	2,408	0.20	0.20	2.14	**0.44**	0.00	2.46	2.02	(0.44)	##
109	1,407	0.13	0.13	2.28	**0.29**	0.00	3.17	2.88	(0.29)	##
100	0	23.33		1.47	**34.29**					##

Exit flow greater than the Pipe Capacity at the Basin Exit

Interceptor	Basin	Flow mgd	From Manhole	To Manhole

Exit flow greater than the Pipe Capacity at the Basin Exit

Interceptor	Basin	Flow mgd	From Manhole	To Manhole
North Rillito Interceptor	19	22.33	1706-36	1703-06

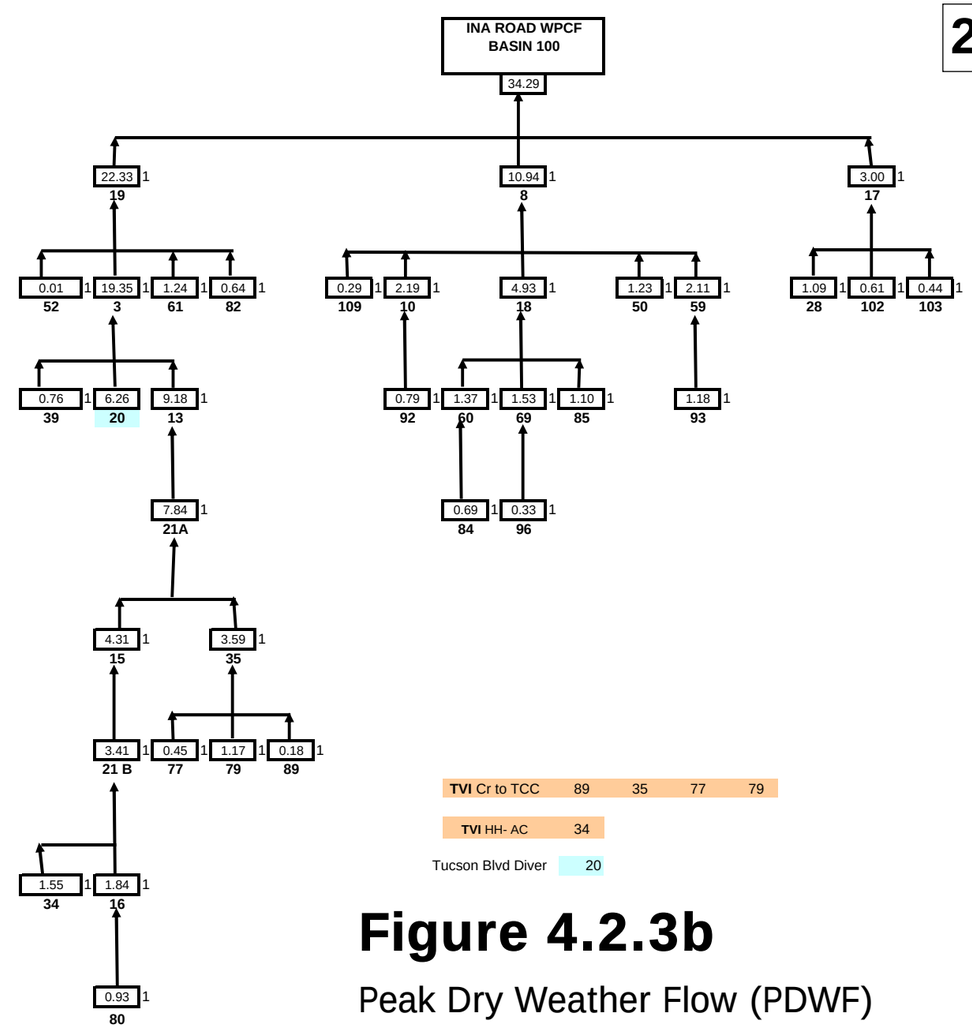

TVI Cr to TCC	89	35	77	79
TVI HH- AC	34			
Tucson Blvd Diver	20			

2010 TAZ

INA

PDWF

Figure 4.2.3b

Peak Dry Weather Flow (PDWF)

Ina Road WPCF Tributary System

TAZ 2010

2015 Model Results

The results of the model's evaluation of the PCWMD's interceptor system for PDWF in the year 2015 are presented in Figures 4.2.3a.and 4.2.3b for Roger Road WPCF and Ina Road WPCF tributary systems respectively. The sections of the system identified by the Facility Plan Model as being deficient (Red) or requiring further evaluation (Orange) for both the Roger Road WWTP and Ina Road WPCF systems are shown on Figure 4.2.3, Interceptor Capacity Analysis 2015.

In the period 2010 to 2015 the Roger Road WWTP to Ina Road WPCF Plant Interconnect is placed in service. The Tucson Boulevard Flow Management Structure ceases to continuously direct flow to the North Rillito Interceptor.

The portions of the Interceptors in 2015 that the Facility Plan Model identifies as having deficiencies (RED) or requiring further evaluation (ORANGE) are shown in the color coded tables on Figures 4.2.4a for the Roger Road WWTP Tributary system and on Figure 4.2.4b for the Ina Road WPCF Tributary system. The results are graphically shown on a map of PCWMD's entire Interceptor system in Figure 4.2.4. The unique results for 2015 are presented in the following narrative; however, the sections of the Interceptors found deficient (RED) and requiring evaluation (ORANGE) in 2005 and 2010 will, barring corrective action, be problems in 2015. The following narrative will limit itself to newly identified reaches of Interceptor or reaches that move from requiring evaluation to deficient. Reaches of interceptor found to have problems (either deficient or requiring evaluation) in prior years are considered to not have been repaired and still pose problems in this and future years. The results are:

Deficiencies noted

Red (Flow greater than 85 percent of Pipe Capacity)

Roger Road WWTP System

1. Roger Road WWTP entrance pipe from Business Center drive to the plant (Basin 5A). (This 66-inch pipe connects the 78-inch pipe to the plant. This may not be a problem depending upon where the plant Interconnect begins from Roger Road WWTP to the Ina Road WPCF.)
2. Pantano Interceptor from Stella Road and the Pantano Wash to Quail Hollow Drive and the Pantano Wash (Basin 29). (This section of pipe carries flow from the Houghton Area Master Plan (HAMP), Rocking K Ranch, Civano and area south of Golf Links and east of Pantano Wash which are all rapidly growing areas.)
3. Pantano Interceptor from Rocking K to Stella Road and Pantano Wash (Basin 113). (This section of pipe carries flow from the HAMP, Rocking K Ranch and Civano all rapidly growing areas.)
4 Basin 51 continues as an increasing capacity problem.

Ina Road WPCF System

1. No problems.

Orange (Flow greater than basin entrance capacity. Requires further evaluation)

Roger Road WWTP System

1. No new problems. All basins that were problems in 2010 continue in 2015.

Ina Road WPCF System

1. (From 2005 & 2010) the North Rillito Interceptor ceases to be a capacity problem as the Tucson Boulevard Flow Management Structure ceases to direct any flow to the North Rillito Interceptor.

See the following Figures 4.2.4 to 4.2.4b.

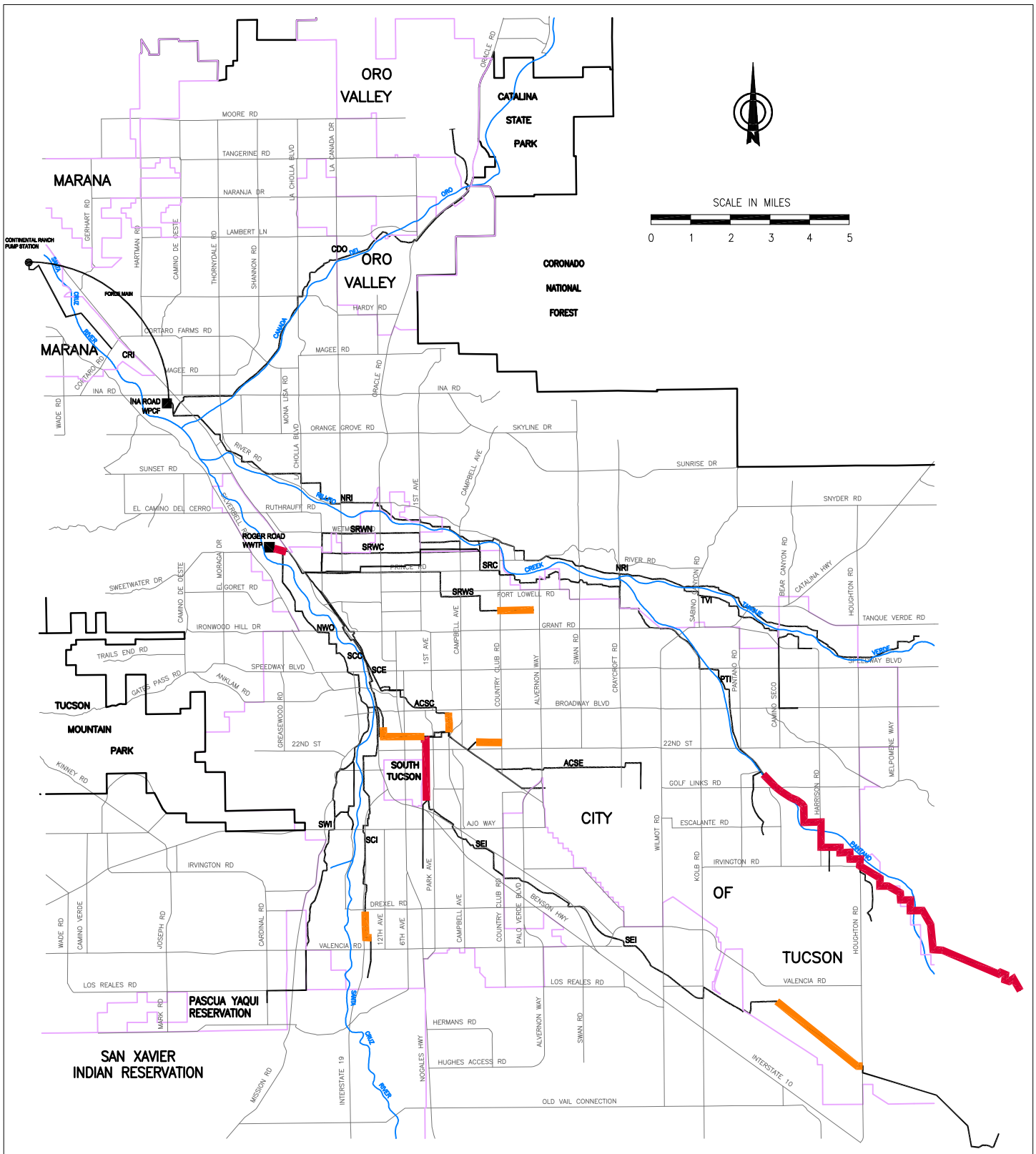

LEGEND

- DEFICIENT (Calculated Basin Exit Flow is Greater Than 85% of Full Pipe Capacity at the Basin Exit)
- FURTHER (Calculated Basin Inlet Flow is Greater Than 85% of Full Pipe Capacity Somewhere Within the Basin)

NOTE

1.) The Roger Road WWTF to Ina Road WPCF Plant Interconnect is placed in service between 2010 and 2015.
The Tucson Blvd. Flow Management Structure is removed from service thereby reducing flow in the North Rillito Interceptor.

Pima County Wastewater Management Department
Facility Plan Update

Figure 4.2.4
Capacity Analysis 2015

2015 TAZ
ROGER
PDWF

Basin No.		Basin Population on sewer 2015	Interceptor Flow **ADWF**	Basin Flow **ADWF**	**Peak Factor**	**PDWF** mgd	**CAPACITY** 85% Full Pipe Capacity ENTER	EXIT	**Over Exit Capacity Indicator**	**Over Enterance Capacity Indicator**	
1A		5,833	2.09	0.50	1.76	**3.69**	5.93	10.11	6.41	2.24	##
1B		4,606	0.39	0.39	2.00	**0.78**	1.70	9.40	8.62	0.92	##
2		15,328	1.30	1.30	1.78	**2.32**	2.98	3.66	1.33	0.65	##
4		11,514	1.35	0.98	1.83	**2.46**	2.37	6.67	4.21	(0.09)	##
5A		588	42.18	0.05	1.39	**58.71**	204.20	52.32	-6.40	145.49	##
5B		3,073	18.79	0.26	1.47	**27.69**	62.93	50.80	23.11	35.23	##
6		21,493	4.14	1.83	1.63	**6.74**	9.65	16.94	10.20	2.91	##
7A		4,790	8.37	0.41	1.55	**12.99**	15.95	22.92	9.92	2.96	##
7B		11,400	7.38	0.97	1.56	**11.54**	13.35	15.95	4.41	1.81	##
9		10,477	13.08	0.89	1.50	**19.56**	15.95	64.16	44.60	(3.60)	##
11		17,871	7.64	1.52	1.57	**11.96**	17.94	22.94	10.98	5.98	##
14		9,265	0.79	0.79	1.86	**1.47**	0.00	6.53	5.06	(1.47)	##
20		13,135	13.29	1.12	1.51	**20.03**	36.35	43.32	23.30	16.33	##
22		776	1.48	0.07	1.63	**2.41**	6.51	12.02	9.61	4.10	##
23		16,643	3.51	1.41	1.67	**5.86**	10.11	14.29	8.42	4.24	##
24		11,513	21.64	0.98	1.62	**35.03**	64.16	64.16	29.13	29.13	##
25A		1,340	3.06	0.11	1.64	**5.03**	9.97	34.16	29.13	4.94	##
25B		6,676	2.05	0.57	1.68	**3.45**	4.00	6.83	3.38	0.55	##
26		17,860	6.41	1.52	1.58	**10.12**	16.13	14.65	4.53	6.01	##
27A		4,629	2.68	0.39	1.73	**4.63**	7.68	12.37	7.74	3.06	##
27B		549	0.05	0.05	2.60	**0.12**	0.00	2.93	2.81	(0.12)	##
27C		5,929	0.50	0.50	1.94	**0.98**	0.00	3.12	2.14	(0.98)	##
29		7,805	3.18	0.66	1.66	**5.28**	3.41	4.82	-0.46	(1.87)	##
30		5,670	4.89	0.48	1.61	**7.86**	10.05	10.05	2.18	2.18	##
31		14,392	1.22	1.22	1.79	**2.19**	0.00	3.41	1.22	(2.19)	##
32		6,889	18.30	0.59	1.48	**27.02**	79.93	62.93	35.91	52.91	##
33		10,750	2.91	0.91	1.69	**4.91**	7.79	8.81	3.90	2.87	##
36		2,292	0.19	0.19	2.15	**0.42**	0.00	1.70	1.28	(0.42)	##
42		3,089	12.18	0.26	1.52	**18.45**	45.18	42.61	24.16	26.73	##
43A		18,862	5.28	1.60	1.72	**9.11**	4.59	11.85	2.74	(4.52)	##
43B		22,716	1.93	1.93	1.61	**3.11**	0.00	4.17	1.06	(3.11)	##
44		3,985	0.34	0.34	2.03	**0.69**	2.31	7.15	6.46	1.63	##
45		11,321	1.36	0.96	1.83	**2.49**	3.06	13.52	11.02	0.57	##
46		12,872	1.50	1.09	1.76	**2.64**	2.41	3.88	1.24	(0.23)	##
48		2,872	0.24	0.24	2.10	**0.51**	0.00	1.95	1.43	(0.51)	##
49		7,110	0.60	0.60	1.91	**1.15**	0.00	3.04	1.89	(1.15)	##
51		9,017	11.08	0.77	1.54	**17.02**	12.98	12.98	-4.04	(4.04)	##
53		2,662	0.23	0.23	2.12	**0.48**	0.00	1.12	0.64	(0.48)	##
54		166	1.37	0.01	1.77	**2.43**	16.01	13.70	11.27	13.58	##
56		10,560	0.90	0.90	1.84	**1.65**	0.00	2.52	0.86	(1.65)	##
57A		4,122	5.09	0.35	1.45	**7.40**	17.70	27.15	19.75	10.30	##
57B		10,357	6.22	0.88	1.45	**9.01**	27.15	24.77	15.76	18.14	##
57C		2,630	0.22	0.22	2.12	**0.47**	0.00	3.90	3.43	(0.47)	##
63		6,921	0.59	0.59	1.91	**1.13**	0.00	4.29	3.17	(1.13)	##
70		8,157	1.54	0.69	1.76	**2.71**	6.60	9.65	6.94	3.89	##
71		17,452	2.28	1.48	1.76	**4.02**	0.00	7.88	3.86	(4.02)	##
73		3,321	0.28	0.28	2.07	**0.58**	0.00	10.05	9.46	(0.58)	##
74		15,138	1.74	1.29	1.74	**3.03**	7.05	6.48	3.45	4.02	##
75		14,385	2.05	1.22	1.72	**3.52**	2.71	3.72	0.21	(0.81)	##
76		5,358	0.46	0.46	1.96	**0.89**	0.00	1.52	0.63	(0.89)	##
78		15,013	2.68	1.28	1.68	**4.51**	3.81	5.40	0.89	(0.70)	##
81		19,659	1.67	1.67	1.75	**2.92**	0.00	3.18	0.26	(2.92)	##
86		13,792	1.17	1.17	1.80	**2.11**	0.00	6.60	4.49	(2.11)	##
87		3,274	1.58	0.28	1.75	**2.77**	3.66	8.77	6.00	0.88	##
88		16,550	1.41	1.41	1.77	**2.49**	0.00	3.80	1.31	(2.49)	##
94		9,982	0.85	0.85	1.85	**1.57**	0.00	3.90	2.33	(1.57)	##
95		9,717	0.83	0.83	1.85	**1.53**	0.00	2.71	1.18	(1.53)	##
97		15,941	1.35	1.35	1.78	**2.41**	0.00	7.81	5.40	(2.41)	##
99		0	30.17	0.00	1.39	**41.98**	78.20	78.20	36.22	36.22	##
111		9,061	0.77	0.77	1.87	**1.44**	0.00	5.29	3.85	(1.44)	##
113		29,653	2.52	2.52	1.69	**4.26**	0.00	3.94	-0.32	(4.26)	##
114		4,771	0.41	0.41	1.99	**0.81**	0.00	1.09	0.28	(0.81)	##
20A				0.00	1.17	**0.00**					##

8

1 **Randolph Park WRF at 3.0 mgd.**
2 **SCIPF in Operation**
3 **The Roger to Ina Plant Interconnect is in service and no flow is diverted to Ina at Tucson Blvd.**
4 **Wastewater is Conveyed from Roger to Ina by Plant Interconnector. 18.43 MGD**

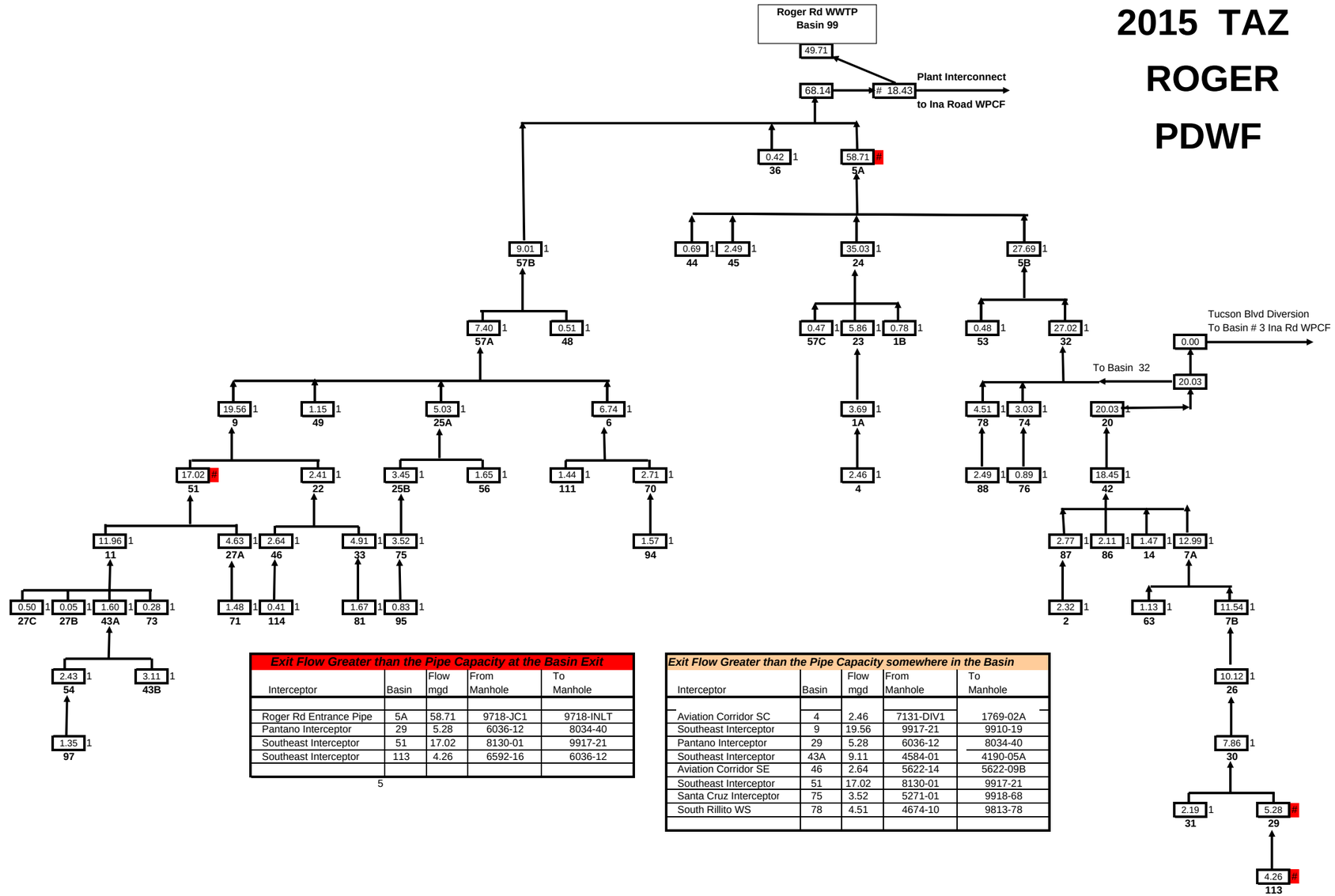

Exit Flow Greater than the Pipe Capacity at the Basin Exit				
Interceptor	Basin	Flow mgd	From Manhole	To Manhole
Roger Rd Entrance Pipe	5A	58.71	9718-JC1	9718-INLT
Pantano Interceptor	29	5.28	6036-12	8034-40
Southeast Interceptor	51	17.02	8130-01	9917-21
Southeast Interceptor	113	4.26	6592-16	6036-12

5

Exit Flow Greater than the Pipe Capacity somewhere in the Basin				
Interceptor	Basin	Flow mgd	From Manhole	To Manhole
Aviation Corridor SC	4	2.46	7131-DIV1	1769-02A
Southeast Interceptor	9	19.56	9917-21	9910-19
Pantano Interceptor	29	5.28	6036-12	8034-40
Southeast Interceptor	43A	9.11	4584-01	4190-05A
Aviation Corridor SE	46	2.64	5622-14	5622-09B
Southeast Interceptor	51	17.02	8130-01	9917-21
Santa Cruz Interceptor	75	3.52	5271-01	9918-68
South Rillito WS	78	4.51	4674-10	9813-78

Figure 4.2.4a
Peak Dry Weather Flow (PDWF)
Roger Road Tributary System
TAZ 2015

1/20/06

2015 TAZ

INA

PDWF

Basin No		Basin Population on Sewer 2015	Interceptor Flow **ADWF**	Basin Flow **ADWF**	**Peak Factor**	**PDWF** mgd	**CAPACITY** 85% Full Pipe Capacity ENTER	EXIT	**Over Exit Capacity Indicator**	**Over Entrance Capacity Indicator**	
3		13,508	7.37	0.95	1.55	**11.41**	22.04	20.33	8.92	10.63	##
8		9,952	7.48	0.90	1.57	**11.71**	17.09	33.25	21.54	5.37	##
10		9,200	1.23	0.83	1.80	**2.21**	3.37	5.79	3.58	1.17	##
13		13,486	6.02	0.94	1.57	**9.44**	0.00	27.74	18.30	(9.44)	##
15		8,481	2.68	0.59	1.66	**4.45**	12.06	11.30	6.85	7.61	##
16		7,824	1.04	0.55	1.80	**1.87**	3.69	4.69	2.82	1.81	##
17		9,177	1.96	0.78	1.72	**3.38**	4.17	32.62	29.25	0.80	##
18		10,151	3.23	0.86	1.66	**5.36**	7.50	17.09	11.72	2.13	##
19		17,661	9.63	1.24	1.52	**14.65**	20.34	28.26	13.62	5.69	##
20		0	0.00	0.00	1.17	**0.00**	9.18	17.48	17.48	9.18	##
21A		3,486	5.08	0.23	1.58	**8.05**	11.30	11.30	3.25	3.25	##
21B		1,996	2.08	0.14	1.69	**3.53**	7.82	7.63	4.10	4.29	##
28		7,608	0.61	0.61	1.90	**1.15**	0.00	3.17	2.02	(1.15)	##
34		12,914	0.90	0.90	1.81	**1.63**	0.00	6.57	4.94	(1.63)	##
35		17,570	2.17	1.23	1.68	**3.66**	5.08	6.36	2.70	1.43	##
39		4,689	0.40	0.40	1.99	**0.79**	0.00	3.55	2.76	(0.79)	##
50		8,869	0.75	0.75	1.87	**1.41**	0.00	4.32	2.91	(1.41)	##
52		15	0.00	0.00	6.06	**0.01**	0.00	0.43	0.43	(0.01)	##
59		6,162	1.23	0.55	1.79	**2.21**	12.02	4.36	2.15	9.81	##
60		4,753	0.79	0.40	1.86	**1.48**	2.52	3.73	2.25	1.04	##
61		9,986	0.70	0.70	1.85	**1.29**	0.00	3.71	2.41	(1.29)	##
69		8,609	0.93	0.77	1.84	**1.72**	2.77	10.00	8.28	1.06	##
77		3,126	0.22	0.22	2.08	**0.46**	0.00	2.52	2.06	(0.46)	##
79		9,285	0.65	0.65	1.86	**1.21**	0.00	6.48	5.27	(1.21)	##
80		5,805	0.49	0.49	1.95	**0.96**	0.00	2.52	1.55	(0.96)	##
82		4,682	0.33	0.33	1.99	**0.65**	0.00	1.74	1.09	(0.65)	##
84		4,593	0.39	0.39	2.00	**0.78**	0.00	4.20	3.42	(0.78)	##
85		7,597	0.65	0.65	1.90	**1.23**	0.00	6.16	4.94	(1.23)	##
89		1,073	0.08	0.08	2.36	**0.18**	0.00	4.01	3.83	(0.18)	##
92		4,439	0.40	0.40	2.00	**0.80**	0.00	1.47	0.67	(0.80)	##
93		7,979	0.68	0.68	1.89	**1.28**	0.00	8.73	7.45	(1.28)	##
96		1,832	0.16	0.16	2.21	**0.34**	0.00	1.85	1.51	(0.34)	##
102		3,925	0.33	0.33	2.03	**0.68**	0.00	3.01	2.33	(0.68)	##
103		2,830	0.24	0.24	2.10	**0.51**	0.00	2.46	1.95	(0.51)	##
109		1,496	0.13	0.13	2.26	**0.30**	0.00	3.17	2.87	(0.30)	##
100		0	19.07		1.46	**27.93**					##

Exit flow greater than the Pipe Capacity at the Basin Exit

Interceptor	Basin	Flow mgd	From Manhole	To Manhole

Exit flow greater than the Pipe Capacity at the Basin Exit

Interceptor	Basin	Flow mgd	From Manhole	To Manhole

1 The Roger to Ina Plant Interconnect is placed in Service between 2010 & 2015. Tucson Blvd Diversion is Zero.

2 Wastewater is Conveyed from Roger to Ina by the Plant Interconnect = 18.43 MGD

The Roger to Ina Plant Interconnect is in service and no flow is diverted to Ina through Tucson Blvd Diversion.

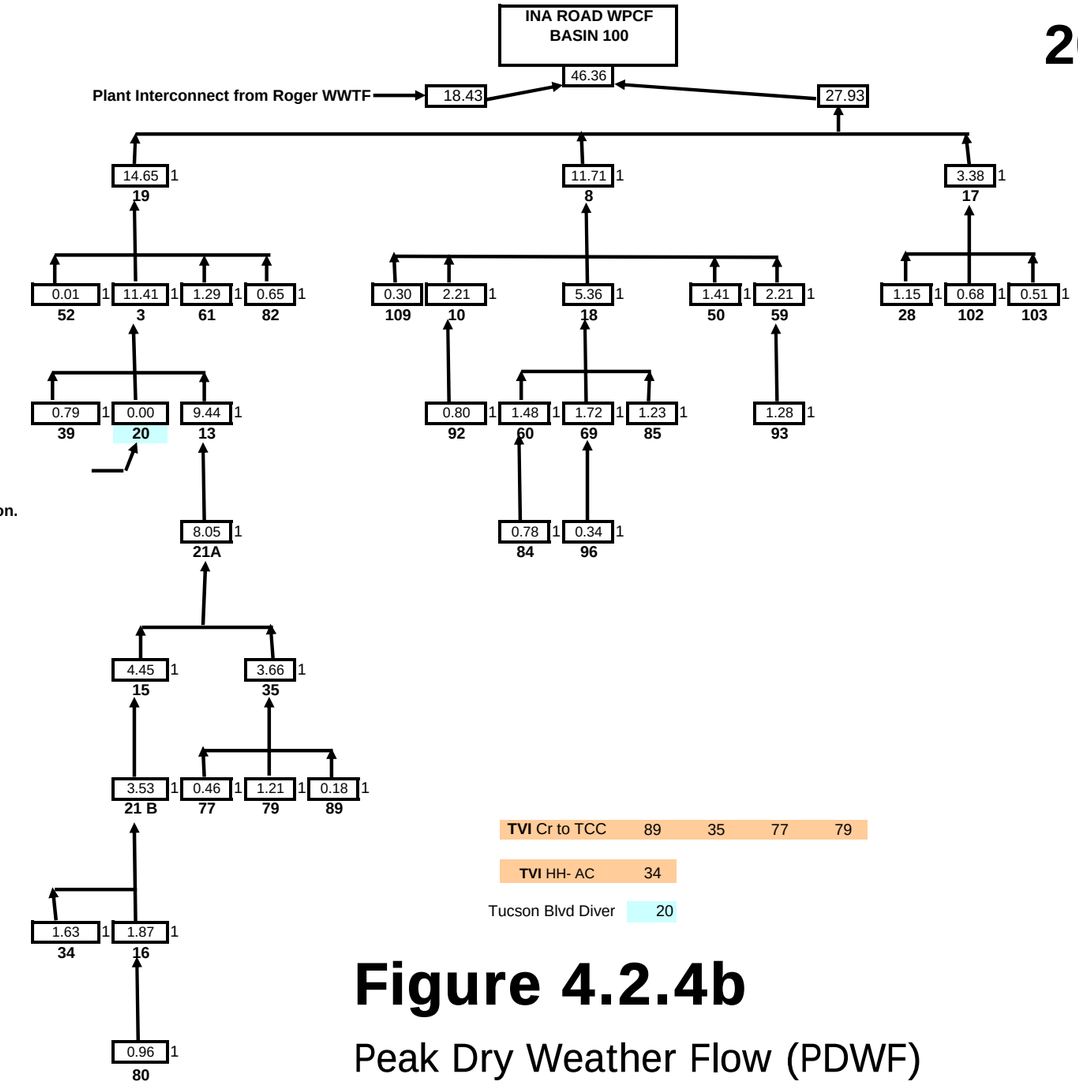

TVI Cr to TCC	89	35	77	79
TVI HH- AC	34			
Tucson Blvd Diver	20			

Figure 4.2.4b

Peak Dry Weather Flow (PDWF)

Ina Road WPCF Tributary System

TAZ 2015

2020 Model Results

The results of the model's evaluation of the PCWMD's interceptor system for PDWF in the year 2020 are presented in Figures 4.2.5a. and 4.2.5b for Roger Road WWTP and Ina Road WPCF tributary systems, respectively. The sections of the system identified by the Facility Plan Model as being deficient (Red) or requiring further evaluation (Orange) for both the Roger Road WWTP and Ina Road WPCF systems are shown on Figure 4.2.5, Interceptor Capacity Analysis 2020.

The Facility Plan Model does not consider any major projects impacting capacity during 2015-2020 period.

The portions of the Interceptors in 2020 that the Facility Plan Model identifies as having deficiencies (Red) or requiring further evaluation (Orange) are shown in the color coded tables on Figures 4.2.5a for the Roger Road tributary system and on Figure 4.2.5b for the Ina Road tributary system. The results are graphically shown on a map of PCWMD's entire Interceptor system in Figure 4.2.5. The unique results for 2020 are presented in the following narrative; however, the sections of the Interceptors found deficient (Red) and requiring evaluation (Orange) in 2005, 2010 & 2015 will, barring corrective action, be problems in 2020. The following narrative will limit itself to newly identified reaches of Interceptor or reaches that move from requiring evaluation to deficient. Reaches of interceptor found to have problems (either deficient or requiring evaluation) in prior years are considered to not have been repaired and still pose problems in this and future years. The results are:

Deficiencies noted

RED (Flow greater than 85 percent of Pipe Capacity)

Roger Road WWTP System

1. Southeast Interceptor from Houghton and Old Vail Road to Vail (Basin 43A). (This section serves two rapidly growing areas Vail and the Houghton Road Master Plan (HAMP).
2. All other deficient Basins were identified in 2015 or before.

Ina Road WPCF System

1. No problems.

ORANGE (Flow greater than basin entrance capacity. Requires further evaluation)

Roger Road WWTP System

1. All deficient basins were identified in 2015 or before. (No new problems.)

Ina Road WPCF System

1. No problems.

See the following Figures 4.2.5 to 4.2.5b.

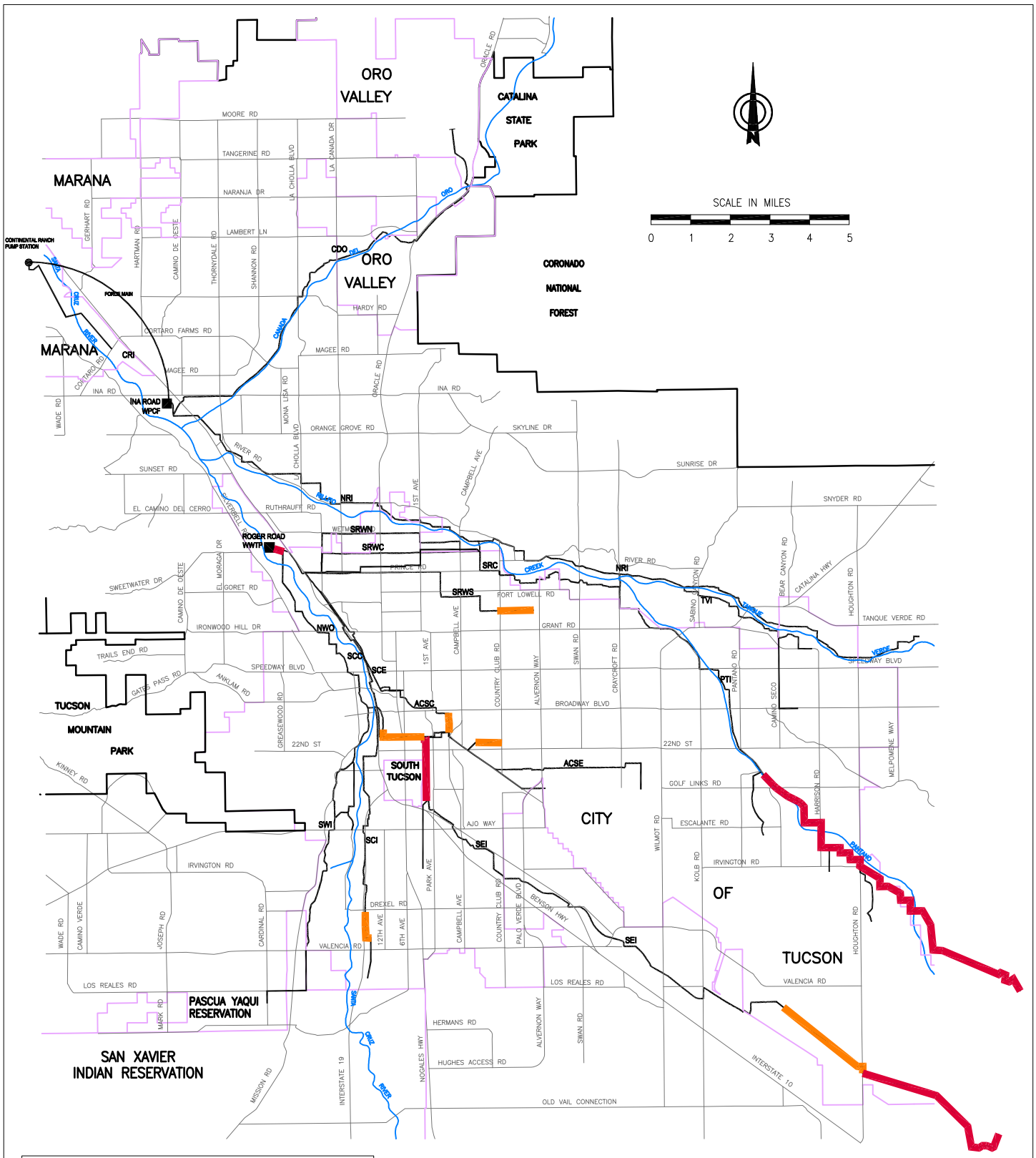

LEGEND

DEFICIENT (Calculated Basin Exit Flow is Greater Than 85% of Full Pipe Capacity at the Basin Exit)

FURTHER (Calculated Basin Inlet Flow is Greater Than 85% of Full Pipe Capacity Somewhere Within the Basin)

Pima County Wastewater Management Department
Facility Plan Update

Figure 4.2.5
Capacity Analysis 2020

2020 TAZ
ROGER
PDWF

Basin No.		Basin Population on sewer 2020	Interceptor Flow **ADWF**	Basin Flow **ADWF**	**Peak Factor**	**PDWF** mgd	**CAPACITY** 85% Full Pipe Capacity ENTER	EXIT	**Over Exit Capacity Indicator**	**Over Enterance Capacity Indicator**	
1A		6,216	2.14	0.53	1.76	**3.77**	5.93	10.11	6.34	2.16	##
1B		5,276	0.45	0.45	1.97	**0.88**	1.70	9.40	8.52	0.82	##
2		15,373	1.31	1.31	1.78	**2.33**	2.98	3.66	1.33	0.65	##
4		11,544	1.36	0.98	1.83	**2.49**	2.37	6.67	4.18	(0.12)	##
5A		601	45.49	0.05	1.39	**63.06**	204.20	52.32	-10.75	141.14	##
5B		3,108	19.89	0.26	1.47	**29.22**	62.93	50.80	21.59	33.71	##
6		22,856	4.37	1.94	1.62	**7.09**	9.65	16.94	9.85	2.56	##
7A		4,875	9.35	0.41	1.54	**14.42**	15.95	22.92	8.50	1.54	##
7B		11,489	8.34	0.98	1.55	**12.95**	13.35	15.95	3.00	0.40	##
9		10,890	15.04	0.93	1.48	**22.31**	15.95	64.16	41.85	(6.36)	##
11		20,488	9.41	1.74	1.55	**14.55**	17.94	22.94	8.40	3.39	##
14		9,320	0.79	0.79	1.86	**1.47**	0.00	6.53	5.05	(1.47)	##
20		13,419	14.34	1.14	1.50	**21.49**	36.35	43.32	21.83	14.86	##
22		787	1.53	0.07	1.63	**2.49**	6.51	12.02	9.53	4.02	##
23		16,887	3.58	1.44	1.67	**5.97**	10.11	14.29	8.32	4.14	##
24		11,695	23.83	0.99	1.61	**38.48**	64.16	64.16	25.68	25.68	##
25A		1,551	3.13	0.13	1.64	**5.14**	9.97	34.16	29.02	4.83	##
25B		6,853	2.09	0.58	1.68	**3.51**	4.00	6.83	3.31	0.49	##
26		18,197	7.37	1.55	1.56	**11.53**	16.13	14.65	3.12	4.61	##
27A		4,705	2.75	0.40	1.72	**4.74**	7.68	12.37	7.63	2.94	##
27B		560	0.05	0.05	2.59	**0.12**	0.00	2.93	2.81	(0.12)	##
27C		6,309	0.54	0.54	1.93	**1.04**	0.00	3.12	2.08	(1.04)	##
29		7,983	4.10	0.68	1.63	**6.67**	3.41	4.82	-1.85	(3.26)	##
30		5,736	5.82	0.49	1.59	**9.25**	10.05	10.05	0.80	0.80	##
31		14,546	1.24	1.24	1.79	**2.21**	0.00	3.41	1.20	(2.21)	##
32		6,978	19.40	0.59	1.47	**28.54**	79.93	62.93	34.39	51.39	##
33		10,893	2.95	0.93	1.68	**4.96**	7.79	8.81	3.85	2.82	##
36		2,633	0.22	0.22	2.12	**0.47**	0.00	1.70	1.23	(0.47)	##
42		3,335	13.19	0.28	1.51	**19.89**	45.18	42.61	22.72	25.29	##
43A		23,366	6.77	1.99	1.68	**11.38**	4.59	11.85	0.47	(6.79)	##
43B		31,701	2.69	2.69	1.58	**4.26**	0.00	4.17	-0.09	(4.26)	##
44		4,003	0.34	0.34	2.03	**0.69**	2.31	7.15	6.46	1.62	##
45		11,488	1.38	0.98	1.83	**2.52**	3.06	13.52	11.00	0.54	##
46		13,086	1.52	1.11	1.76	**2.67**	2.41	3.88	1.21	(0.26)	##
48		3,226	0.27	0.27	2.07	**0.57**	0.00	1.95	1.38	(0.57)	##
49		7,743	0.66	0.66	1.89	**1.25**	0.00	3.04	1.80	(1.25)	##
51		9,451	12.97	0.80	1.52	**19.69**	12.98	12.98	-6.71	(6.71)	##
53		2,673	0.23	0.23	2.12	**0.48**	0.00	1.12	0.64	(0.48)	##
54		183	1.71	0.02	1.74	**2.98**	16.01	13.70	10.72	13.03	##
56		10,714	0.91	0.91	1.84	**1.67**	0.00	2.52	0.84	(1.67)	##
57A		4,179	5.39	0.36	1.44	**7.78**	17.70	27.15	19.37	9.92	##
57B		10,860	6.58	0.92	1.44	**9.49**	27.15	24.77	15.28	17.66	##
57C		2,775	0.24	0.24	2.11	**0.50**	0.00	3.90	3.40	(0.50)	##
63		6,961	0.59	0.59	1.91	**1.13**	0.00	4.29	3.16	(1.13)	##
70		8,350	1.64	0.71	1.75	**2.87**	6.60	9.65	6.78	3.73	##
71		18,251	2.35	1.55	1.76	**4.13**	0.00	7.88	3.75	(4.13)	##
73		3,700	0.31	0.31	2.04	**0.64**	0.00	10.05	9.40	(0.64)	##
74		15,493	1.78	1.32	1.74	**3.09**	7.05	6.48	3.39	3.96	##
75		14,661	2.09	1.25	1.71	**3.58**	2.71	3.72	0.14	(0.87)	##
76		5,432	0.46	0.46	1.96	**0.91**	0.00	1.52	0.62	(0.91)	##
78		15,046	2.70	1.28	1.68	**4.53**	3.81	5.40	0.87	(0.72)	##
81		19,890	1.69	1.69	1.74	**2.95**	0.00	3.18	0.23	(2.95)	##
86		13,920	1.18	1.18	1.80	**2.13**	0.00	6.60	4.47	(2.13)	##
87		3,297	1.59	0.28	1.75	**2.78**	3.66	8.77	5.99	0.87	##
88		16,665	1.42	1.42	1.77	**2.51**	0.00	3.80	1.29	(2.51)	##
94		10,935	0.93	0.93	1.84	**1.71**	0.00	3.90	2.20	(1.71)	##
95		9,928	0.84	0.84	1.85	**1.56**	0.00	2.71	1.15	(1.56)	##
97		19,939	1.69	1.69	1.74	**2.95**	0.00	7.81	4.85	(2.95)	##
99		0	34.95	0.00	1.39	**48.44**	78.20	78.20	29.76	29.76	##
111		9,302	0.79	0.79	1.86	**1.47**	0.00	5.29	3.82	(1.47)	##
113		40,203	3.42	3.42	1.65	**5.64**	0.00	3.94	-1.70	(5.64)	##
114		4,773	0.41	0.41	1.99	**0.81**	0.00	1.09	0.28	(0.81)	##
20A				0.00	1.17	**0.00**					##

8

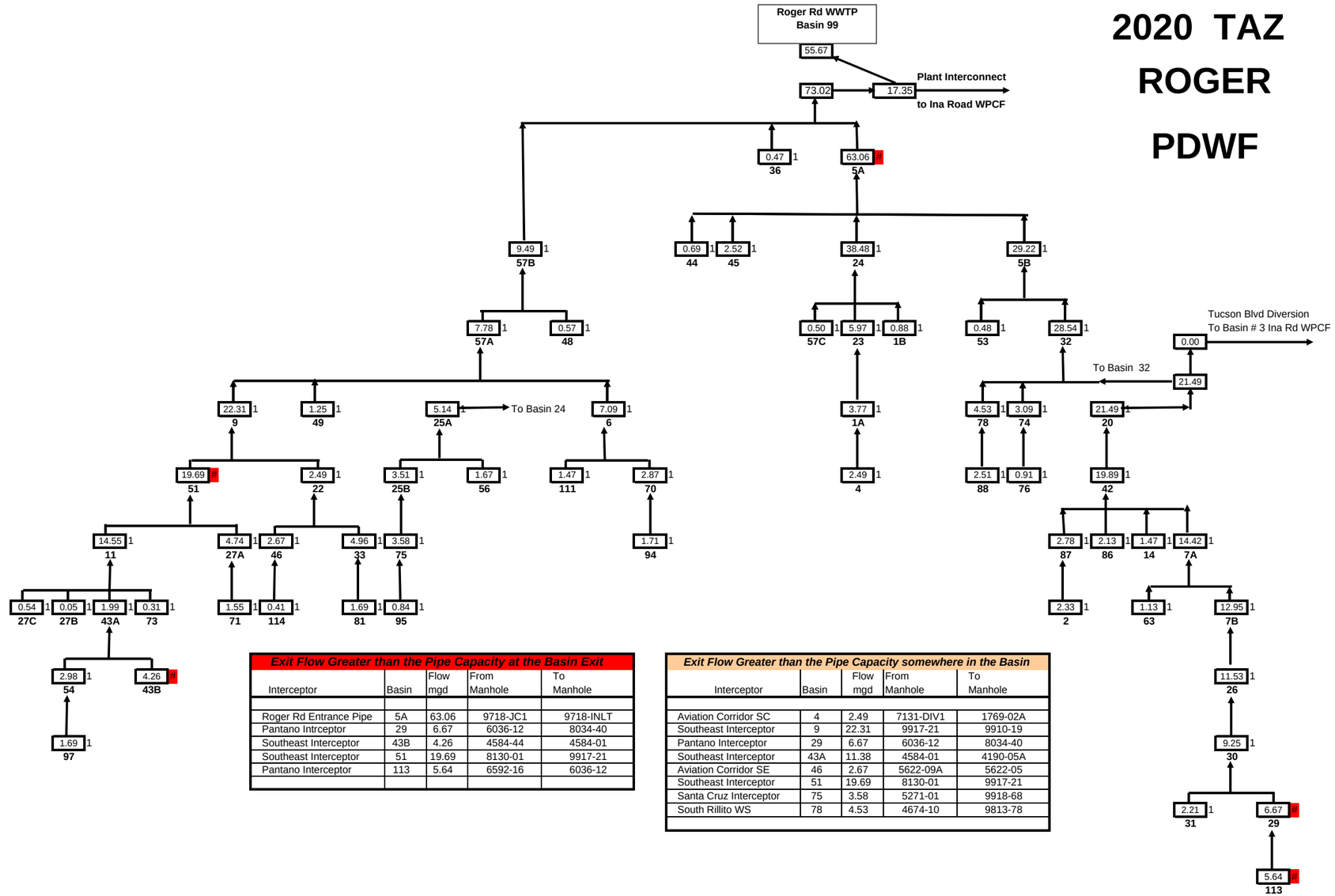

Exit Flow Greater than the Pipe Capacity at the Basin Exit

Interceptor	Basin	Flow mgd	From Manhole	To Manhole
Roger Rd Entrance Pipe	5A	63.06	9718-JC1	9718-INLT
Pantano Intrceptor	29	6.67	6036-12	8034-40
Southeast Interceptor	43B	4.26	4584-44	4584-01
Southeast Interceptor	51	19.69	8130-01	9917-21
Pantano Interceptor	113	5.64	6592-16	6036-12

Exit Flow Greater than the Pipe Capacity somewhere in the Basin

Interceptor	Basin	Flow mgd	From Manhole	To Manhole
Aviation Corridor SC	4	2.49	7131-DIV1	1769-02A
Southeast Interceptor	9	22.31	9917-21	9910-19
Pantano Interceptor	29	6.67	6036-12	8034-40
Southeast Interceptor	43A	11.38	4584-01	4190-05A
Aviation Corridor SE	46	2.67	5622-09A	5622-05
Southeast Interceptor	51	19.69	8130-01	9917-21
Santa Cruz Interceptor	75	3.58	5271-01	9918-68
South Rillito WS	78	4.53	4674-10	9813-78

1 Randolph Park WRF at 3.0 mgd.
2 SCIPF in Operation
3 The Roger to Ina Plant Interconnect is in service and no flow is diverted to Ina at Tucson Blvd.
4 Wastewater is Conveyed from Roger to Ina by Plant Interconnector. 17.35 MGD

Figure 4.2.5a
Peak Dry Weather Flow (PDWF)
Roger Road Tributary System
TAZ 2020

2020 TAZ

INA

PDWF

Basin No		Basin Popualtion on Sewer 2020	Interceptor Flow **ADWF**	Basin Flow **ADWF**	**Peak Factor**	**PDWF** mgd	**CAPACITY** 85% Full Pipe Capacity ENTER	EXIT	**Over Exit Capacity Indicator**	**Over Entrance Capacity Indicator**	
3		14,074	7.60	0.99	1.55	**11.75**	22.04	20.33	8.59	10.30	##
8		10,563	8.00	0.95	1.56	**12.47**	17.09	33.25	20.78	4.61	##
10		9,309	1.24	0.84	1.80	**2.23**	3.37	5.79	3.55	1.14	##
13		13,982	6.20	0.98	1.56	**9.69**	0.00	27.74	18.05	(9.69)	##
15		8,656	2.76	0.61	1.66	**4.58**	12.06	11.30	6.72	7.48	##
16		7,906	1.06	0.55	1.80	**1.91**	3.69	4.69	2.78	1.78	##
17		10,660	2.20	0.91	1.70	**3.75**	4.17	32.62	28.88	0.43	##
18		10,544	3.51	0.90	1.65	**5.79**	7.50	17.09	11.30	1.71	##
19		18,474	9.96	1.29	1.52	**15.11**	20.34	28.26	13.16	5.23	##
20		0	0.00	0.00	1.17	**0.00**	9.18	17.48	17.48	9.18	##
21A		3,568	5.22	0.23	1.58	**8.25**	11.30	11.30	3.04	3.04	##
21B		2,038	2.16	0.14	1.69	**3.65**	7.82	7.63	3.99	4.17	##
28		8,064	0.65	0.65	1.89	**1.22**	0.00	3.17	1.95	(1.22)	##
34		13,612	0.95	0.95	1.80	**1.72**	0.00	6.57	4.86	(1.72)	##
35		17,920	2.22	1.25	1.68	**3.73**	5.08	6.36	2.63	1.35	##
39		4,937	0.42	0.42	1.98	**0.83**	0.00	3.55	2.72	(0.83)	##
50		10,115	0.86	0.86	1.85	**1.59**	0.00	4.32	2.73	(1.59)	##
52		15	0.00	0.00	6.06	**0.01**	0.00	0.43	0.43	(0.01)	##
59		6,221	1.29	0.56	1.79	**2.31**	12.02	4.36	2.05	9.71	##
60		4,938	0.86	0.42	1.85	**1.59**	2.52	3.73	2.15	0.93	##
61		10,421	0.73	0.73	1.84	**1.34**	0.00	3.71	2.36	(1.34)	##
69		9,779	1.04	0.88	1.82	**1.90**	2.77	10.00	8.10	0.87	##
77		3,134	0.22	0.22	2.08	**0.46**	0.00	2.52	2.06	(0.46)	##
79		9,581	0.67	0.67	1.86	**1.24**	0.00	6.48	5.23	(1.24)	##
80		5,998	0.51	0.51	1.94	**0.99**	0.00	2.52	1.53	(0.99)	##
82		4,749	0.33	0.33	1.99	**0.66**	0.00	1.74	1.08	(0.66)	##
84		5,155	0.44	0.44	1.97	**0.86**	0.00	4.20	3.33	(0.86)	##
85		8,422	0.72	0.72	1.88	**1.34**	0.00	6.16	4.82	(1.34)	##
89		1,075	0.08	0.08	2.36	**0.18**	0.00	4.01	3.83	(0.18)	##
92		4,488	0.40	0.40	2.00	**0.81**	0.00	1.47	0.66	(0.81)	##
93		8,638	0.73	0.73	1.87	**1.38**	0.00	8.73	7.35	(1.38)	##
96		1,892	0.16	0.16	2.20	**0.35**	0.00	1.85	1.50	(0.35)	##
102		4,358	0.37	0.37	2.01	**0.74**	0.00	3.01	2.27	(0.74)	##
103		3,252	0.28	0.28	2.07	**0.57**	0.00	2.46	1.88	(0.57)	##
109		1,583	0.14	0.14	2.25	**0.32**	0.00	3.17	2.85	(0.32)	##
100		0	20.15		1.46	**29.42**					##

Exit flow greater than the Pipe Capacity at the Basin Exit

Interceptor	Basin	Flow mgd	From Manhole	To Manhole

Exit flow greater than the Pipe Capacity at the Basin Exit

Interceptor	Basin	Flow mgd	From Manhole	To Manhole

1 The Roger to Ina Plant Interconnect is placed in Service between 2010 & 2015. Tucson Blvd Diversion is Zero.

2 Wastewater is Conveyed from Roger to Ina by the Plant Interconnect = 17.35 MGD

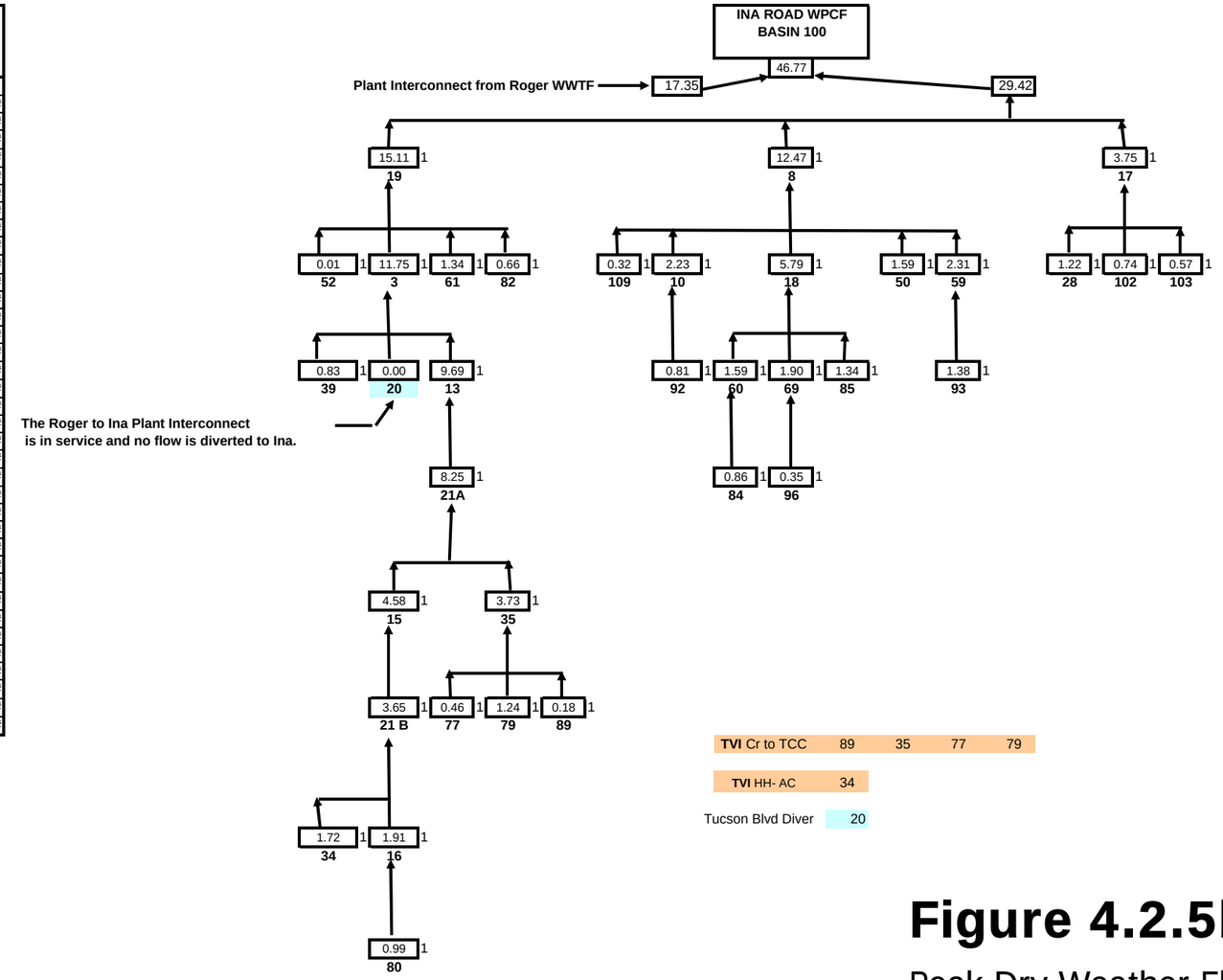

TVI Cr to TCC	89	35	77	79

TVI HH- AC	34

Tucson Blvd Diver	20

Figure 4.2.5b

Peak Dry Weather Flow (PDWF)

Ina Road WPCF Tributary System

TAZ 2020

2025 Model Results

The results of the model's evaluation of the PCWMD's interceptor system for PDWF in the year 2025 are presented in Figures 4.2.6a. and 4.2.6b for Roger Road WWTP and Ina Road WPCF tributary systems respectively. The sections of the system identified by the Facility Plan Model as being deficient (Red) or requiring further evaluation (Orange) for both the Roger Road WWTP and Ina Road WPCF systems are shown on Figure 4.2.6, Interceptor Capacity Analysis 2025.

The portions of the Interceptors in 2025 that the Facility Plan Model identifies as having deficiencies (Red) or requiring further evaluation (Orange) are shown in the color coded tables on Figures 4.2.6a for the Roger Road WWTP Tributary system and on Figure 4.2.6b for the Ina Road WPCF Tributary system. The results are graphically shown on a map of PCWMD's entire Interceptor system in Figure 4.2.6. The unique results for 2025 are presented in the following narrative; however, the sections of the Interceptors found deficient (Red) and requiring evaluation (Orange) in 2005, 2010, 2015 and 2020 will, barring corrective action, be problems in 2025. The following narrative will limit itself to newly identified reaches of Interceptor or reaches that move from requiring evaluation to deficient. Reaches of interceptor found to have problems (either deficient or requiring evaluation) in prior years are considered to not have been repaired and still pose problems in this and future years. The results are:

Deficiencies noted

RED (Flow greater than 85 percent of Pipe Capacity)

Roger Road WWTP System

1. PTI from Pantano Wash and Quail Hollow Drive to Pantano Wash and 22nd Street (Basin 30). (This section of pipe carries flow from the HAMP, Rocking K Ranch, Civano and area south and east of 22nd Street and Pantano Wash all rapidly growing areas.)
2. All other deficient basins were identified in 2020 or before.

Ina Road WPCF System

1. No problems.

ORANGE (Flow greater than basin entrance capacity. Requires further evaluation) 7B 30

Roger Road WWTP System

1. PTI from Pantano Wash and Quail Hollow Drive to Pantano Wash and 22nd Street (Basin 30). (This section of pipe carries flow from the HAMP, Rocking K Ranch, Civano and area south and east of 22nd Street and Pantano Wash all rapidly growing areas.)
2. PTI from Speedway and Pantano Wash to Kolb Road and Via Dorado (Basin 7B). (This section of the Interceptor is downstream from Basin 30 and carries all the flow from Basin 30 plus the area east of ½ mile west of Kolb road and Speedway.)
3. All other deficient Basins were identified in 2020 or before.

Ina Road WPCF System

1. No problems.

See the following Figures 4.2.6 to 4.2.6b.

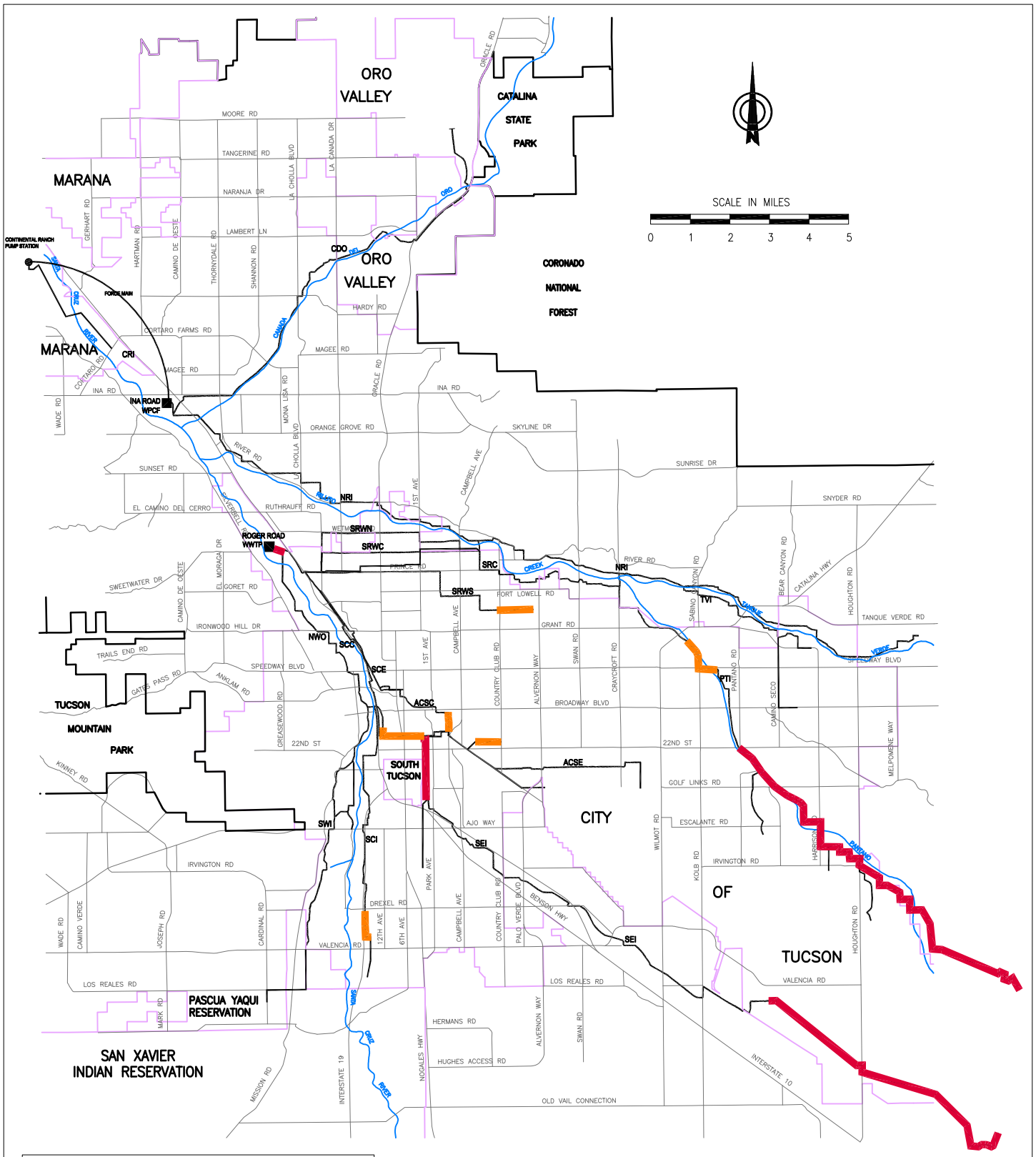

LEGEND

DEFICIENT (Calculated Basin Exit Flow is Greater Than 85% of Full Pipe Capacity at the Basin Exit)

FURTHER (Calculated Basin Inlet Flow is Greater Than 85% of Full Pipe Capacity Somewhere Within the Basin)

Pima County Wastewater Management Department
Facility Plan Update

Figure 4.2.6
Capacity Analysis 2025

2025 TAZ

ROGER

PDWF

Basin No.		Basin Population on sewer 2025	Interceptor Flow **ADWF**	Basin Flow **ADWF**	**Peak Factor**	**PDWF** mgd	**CAPACITY** 85% Full Pipe Capacity ENTER	EXIT	**Over Exit Capacity Indicator**	**Over Enterance Capacity Indicator**	
1A		6,601	2.19	0.56	1.76	**3.85**	5.93	10.11	6.26	2.08	##
1B		5,952	0.51	0.51	1.94	**0.98**	1.70	9.40	8.42	0.72	##
2		15,425	1.31	1.31	1.78	**2.34**	2.98	3.66	1.32	0.64	##
4		11,582	1.38	0.98	1.83	**2.52**	2.37	6.67	4.15	(0.15)	##
5A		615	48.81	0.05	1.38	**67.42**	204.20	52.32	-15.10	136.78	##
5B		3,143	21.01	0.27	1.46	**30.75**	62.93	50.80	20.06	32.18	##
6		24,228	4.61	2.06	1.62	**7.44**	9.65	16.94	9.50	2.20	##
7A		4,963	10.33	0.42	1.53	**15.82**	15.95	22.92	7.09	0.13	##
7B		11,580	9.31	0.98	1.54	**14.36**	13.35	15.95	1.59	(1.01)	##
9		11,309	17.00	0.96	1.47	**25.05**	15.95	64.16	39.11	(9.10)	##
11		23,114	11.19	1.96	1.53	**17.09**	17.94	22.94	5.86	0.85	##
14		9,377	0.80	0.80	1.86	**1.48**	0.00	6.53	5.05	(1.48)	##
20		13,710	15.38	1.17	1.49	**22.96**	36.35	43.32	20.36	13.39	##
22		798	1.58	0.07	1.62	**2.57**	6.51	12.02	9.45	3.94	##
23		17,135	3.65	1.46	1.67	**6.08**	10.11	14.29	8.21	4.03	##
24		11,880	26.02	1.01	1.61	**41.93**	64.16	64.16	22.23	22.23	##
25A		1,764	3.21	0.15	1.64	**5.25**	9.97	34.16	28.91	4.72	##
25B		7,034	2.13	0.60	1.68	**3.58**	4.00	6.83	3.25	0.42	##
26		18,540	8.33	1.58	1.55	**12.93**	16.13	14.65	1.72	3.20	##
27A		4,783	2.83	0.41	1.72	**4.86**	7.68	12.37	7.51	2.83	##
27B		571	0.05	0.05	2.58	**0.13**	0.00	2.93	2.81	(0.13)	##
27C		6,690	0.57	0.57	1.92	**1.09**	0.00	3.12	2.03	(1.09)	##
29		8,163	5.01	0.69	1.61	**8.04**	3.41	4.82	-3.22	(4.64)	##
30		5,805	6.75	0.49	1.57	**10.63**	10.05	10.05	-0.58	(0.58)	##
31		14,709	1.25	1.25	1.79	**2.24**	0.00	3.41	1.17	(2.24)	##
32		7,071	20.51	0.60	1.47	**30.06**	79.93	62.93	32.86	49.86	##
33		11,040	2.98	0.94	1.68	**5.01**	7.79	8.81	3.80	2.77	##
36		2,977	0.25	0.25	2.09	**0.53**	0.00	1.70	1.17	(0.53)	##
42		3,583	14.22	0.30	1.50	**21.33**	45.18	42.61	21.28	23.85	##
43A		27,870	8.26	2.37	1.65	**13.62**	4.59	11.85	-1.77	(9.03)	##
43B		40,689	3.46	3.46	1.56	**5.39**	0.00	4.17	-1.22	(5.39)	##
44		4,023	0.34	0.34	2.02	**0.69**	2.31	7.15	6.46	1.62	##
45		11,661	1.39	0.99	1.82	**2.54**	3.06	13.52	10.98	0.52	##
46		13,306	1.54	1.13	1.76	**2.70**	2.41	3.88	1.18	(0.29)	##
48		3,583	0.30	0.30	2.05	**0.62**	0.00	1.95	1.32	(0.62)	##
49		8,379	0.71	0.71	1.88	**1.34**	0.00	3.04	1.70	(1.34)	##
51		9,889	14.85	0.84	1.50	**22.34**	12.98	12.98	-9.36	(9.36)	##
53		2,686	0.23	0.23	2.12	**0.48**	0.00	1.12	0.64	(0.48)	##
54		199	2.05	0.02	1.72	**3.52**	16.01	13.70	10.18	12.49	##
56		10,870	0.92	0.92	1.84	**1.70**	0.00	2.52	0.82	(1.70)	##
57A		4,239	5.68	0.36	1.44	**8.16**	17.70	27.15	18.98	9.53	##
57B		11,367	6.95	0.97	1.43	**9.96**	27.15	24.77	14.80	17.18	##
57C		2,922	0.25	0.25	2.10	**0.52**	0.00	3.90	3.38	(0.52)	##
63		7,003	0.60	0.60	1.91	**1.14**	0.00	4.29	3.15	(1.14)	##
70		8,546	1.74	0.73	1.74	**3.02**	6.60	9.65	6.63	3.57	##
71		19,056	2.42	1.62	1.75	**4.23**	0.00	7.88	3.65	(4.23)	##
73		4,081	0.35	0.35	2.02	**0.70**	0.00	10.05	9.35	(0.70)	##
74		15,853	1.82	1.35	1.73	**3.15**	7.05	6.48	3.33	3.90	##
75		14,942	2.13	1.27	1.71	**3.65**	2.71	3.72	0.07	(0.94)	##
76		5,508	0.47	0.47	1.96	**0.92**	0.00	1.52	0.60	(0.92)	##
78		15,085	2.71	1.28	1.68	**4.55**	3.81	5.40	0.85	(0.74)	##
81		20,127	1.71	1.71	1.74	**2.98**	0.00	3.18	0.20	(2.98)	##
86		14,056	1.19	1.19	1.80	**2.14**	0.00	6.60	4.45	(2.14)	##
87		3,323	1.59	0.28	1.75	**2.79**	3.66	8.77	5.98	0.86	##
88		16,787	1.43	1.43	1.77	**2.52**	0.00	3.80	1.28	(2.52)	##
94		11,893	1.01	1.01	1.82	**1.84**	0.00	3.90	2.06	(1.84)	##
95		10,144	0.86	0.86	1.85	**1.59**	0.00	2.71	1.12	(1.59)	##
97		23,939	2.03	2.03	1.72	**3.49**	0.00	7.81	4.31	(3.49)	##
99		0	39.77	0.00	1.38	**54.91**	78.20	78.20	23.29	23.29	##
111		9,546	0.81	0.81	1.86	**1.51**	0.00	5.29	3.78	(1.51)	##
113		50,765	4.31	4.31	1.62	**7.00**	0.00	3.94	-3.07	(7.00)	##
114		4,776	0.41	0.41	1.99	**0.81**	0.00	1.09	0.28	(0.81)	##
20A				0.00	1.17	**0.00**					##

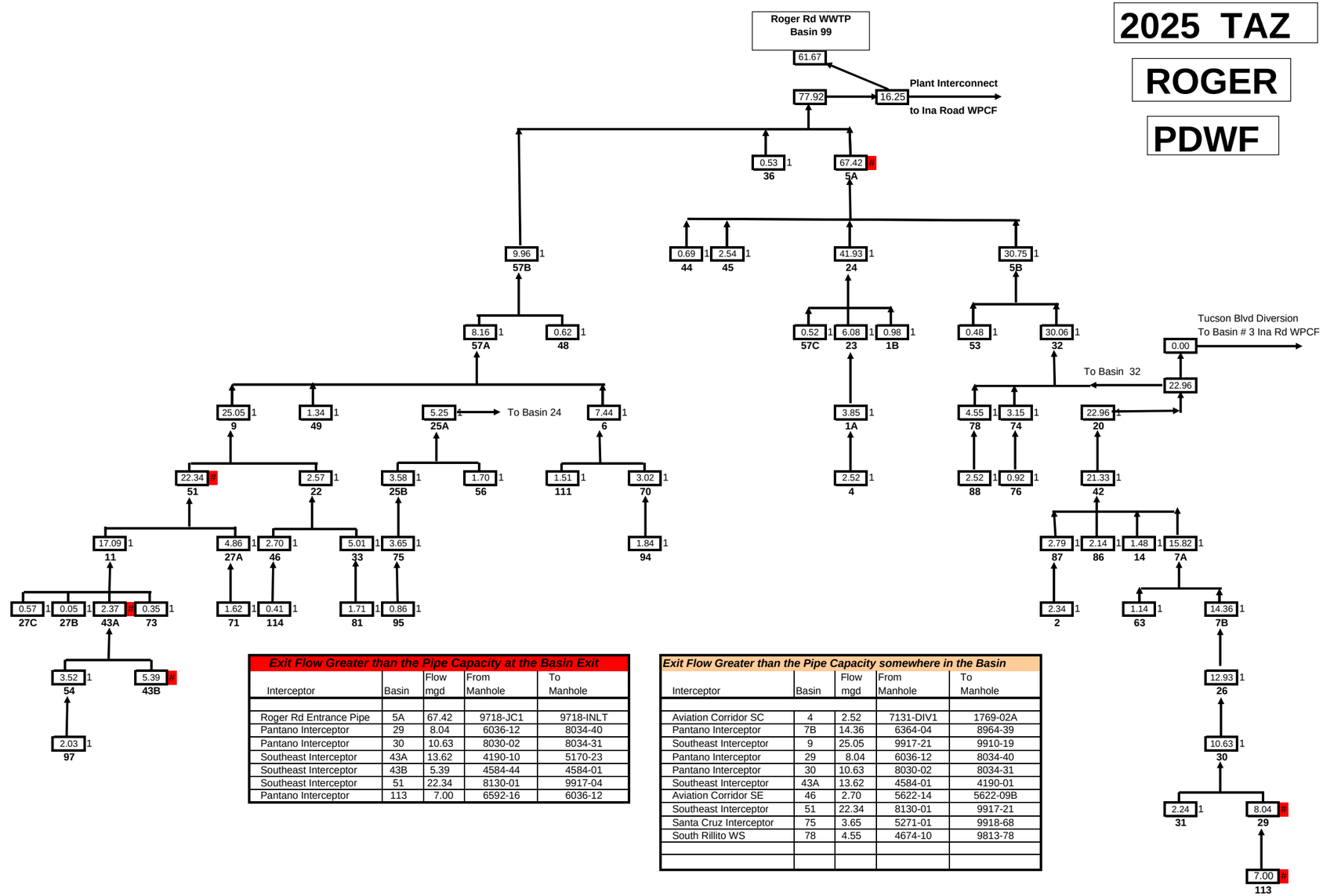

Exit Flow Greater than the Pipe Capacity at the Basin Exit

Interceptor	Basin	Flow mgd	From Manhole	To Manhole
Roger Rd Entrance Pipe	5A	67.42	9718-JC1	9718-INLT
Pantano Interceptor	29	8.04	6036-12	8034-40
Pantano Interceptor	30	10.63	8030-02	8034-31
Southeast Interceptor	43A	13.62	4190-10	5170-23
Southeast Interceptor	43B	5.39	4584-44	4584-01
Southeast Interceptor	51	22.34	8130-01	9917-04
Pantano Interceptor	113	7.00	6592-16	6036-12

Exit Flow Greater than the Pipe Capacity somewhere in the Basin

Interceptor	Basin	Flow mgd	From Manhole	To Manhole
Aviation Corridor SC	4	2.52	7131-DIV1	1769-02A
Pantano Interceptor	7B	14.36	6364-04	8964-39
Southeast Interceptor	9	25.05	9917-21	9910-19
Pantano Interceptor	29	8.04	6036-12	8034-40
Pantano Interceptor	30	10.63	8030-02	8034-31
Southeast Interceptor	43A	13.62	4584-01	4190-01
Aviation Corridor SE	46	2.70	5622-14	5622-09B
Southeast Interceptor	51	22.34	8130-01	9917-21
Santa Cruz Interceptor	75	3.65	5271-01	9918-68
South Rillito WS	78	4.55	4674-10	9813-78

1 **Randolph Park WRF at 3.0 mgd.**
2 **SCIPF in Operation**
3 **The Roger to Ina Plant Interconnect is in service and no flow is diverted to Ina at Tucson Blvd.**
4 **Wastewater is Conveyed from Roger to Ina by Plant Interconnector. 16.25 MGD**

Figure 4.2.6a

Peak Dry Weather Flow (PDWF)

Roger Road Tributary System

TAZ 2025

1/20/06

2025 TAZ

INA

PDWF

Basin No	Basin Population 0n Sewer 2025	Interceptor Flow **ADWF**	Basin Flow **ADWF**	**Peak Factor**	**PDWF** mgd	**CAPACITY** 85% Full Pipe Capacity ENTER	EXIT	**Over Exit Capacity Indicator**	**Over Entrance Capacity Indicator**	
3	14,648	7.84	1.03	1.54	**12.09**	22.04	20.33	8.24	9.95	##
8	11,183	8.53	1.01	1.55	**13.24**	17.09	33.25	20.01	3.85	##
10	9,422	1.26	0.85	1.80	**2.26**	3.37	5.79	3.53	1.12	##
13	14,484	6.37	1.01	1.56	**9.95**	0.00	27.74	17.79	(9.95)	##
15	8,834	2.85	0.62	1.65	**4.71**	12.06	11.30	6.58	7.35	##
16	7,991	1.09	0.56	1.79	**1.95**	3.69	4.69	2.74	1.74	##
17	12,147	2.43	1.03	1.69	**4.12**	4.17	32.62	28.51	0.06	##
18	10,941	3.79	0.93	1.64	**6.21**	7.50	17.09	10.87	1.28	##
19	19,298	10.29	1.35	1.51	**15.58**	20.34	28.26	12.69	4.76	##
20	0	0.00	0.00	1.17	**0.00**	9.18	17.48	17.48	9.18	##
21A	3,651	5.36	0.24	1.58	**8.46**	11.30	11.30	2.84	2.84	##
21B	2,082	2.23	0.15	1.68	**3.76**	7.82	7.63	3.87	4.06	##
28	8,523	0.68	0.68	1.88	**1.28**	0.00	3.17	1.89	(1.28)	##
34	14,323	1.00	1.00	1.79	**1.80**	0.00	6.57	4.77	(1.80)	##
35	18,277	2.27	1.28	1.68	**3.80**	5.08	6.36	2.56	1.28	##
39	5,189	0.44	0.44	1.97	**0.87**	0.00	3.55	2.68	(0.87)	##
50	11,366	0.97	0.97	1.83	**1.77**	0.00	4.32	2.55	(1.77)	##
52	15	0.00	0.00	6.06	**0.01**	0.00	0.43	0.43	(0.01)	##
59	6,282	1.36	0.57	1.78	**2.41**	12.02	4.36	1.95	9.61	##
60	5,126	0.92	0.44	1.84	**1.69**	2.52	3.73	2.04	0.82	##
61	10,858	0.76	0.76	1.84	**1.40**	0.00	3.71	2.31	(1.40)	##
69	10,952	1.15	0.99	1.81	**2.08**	2.77	10.00	7.91	0.69	##
77	3,145	0.22	0.22	2.08	**0.46**	0.00	2.52	2.06	(0.46)	##
79	9,886	0.69	0.69	1.85	**1.28**	0.00	6.48	5.20	(1.28)	##
80	6,195	0.53	0.53	1.94	**1.02**	0.00	2.52	1.50	(1.02)	##
82	4,818	0.34	0.34	1.99	**0.67**	0.00	1.74	1.07	(0.67)	##
84	5,719	0.49	0.49	1.95	**0.95**	0.00	4.20	3.25	(0.95)	##
85	9,251	0.79	0.79	1.86	**1.46**	0.00	6.16	4.70	(1.46)	##
89	1,078	0.08	0.08	2.36	**0.18**	0.00	4.01	3.83	(0.18)	##
92	4,539	0.41	0.41	2.00	**0.82**	0.00	1.47	0.65	(0.82)	##
93	9,302	0.79	0.79	1.86	**1.47**	0.00	8.73	7.26	(1.47)	##
96	1,951	0.17	0.17	2.19	**0.36**	0.00	1.85	1.49	(0.36)	##
102	4,794	0.41	0.41	1.99	**0.81**	0.00	3.01	2.20	(0.81)	##
103	3,676	0.31	0.31	2.04	**0.64**	0.00	2.46	1.82	(0.64)	##
109	1,672	0.15	0.15	2.23	**0.34**	0.00	3.17	2.83	(0.34)	##
100	0	21.25		1.46	**30.92**					##

Exit flow greater than the Pipe Capacity at the Basin Exit

Interceptor	Basin	Flow mgd	From Manhole	To Manhole

Exit flow greater than the Pipe Capacity at the Basin Exit

Interceptor	Basin	Flow mgd	From Manhole	To Manhole

The Roger to Ina Plant Interconnect is in service and no flow is diverted to Ina.

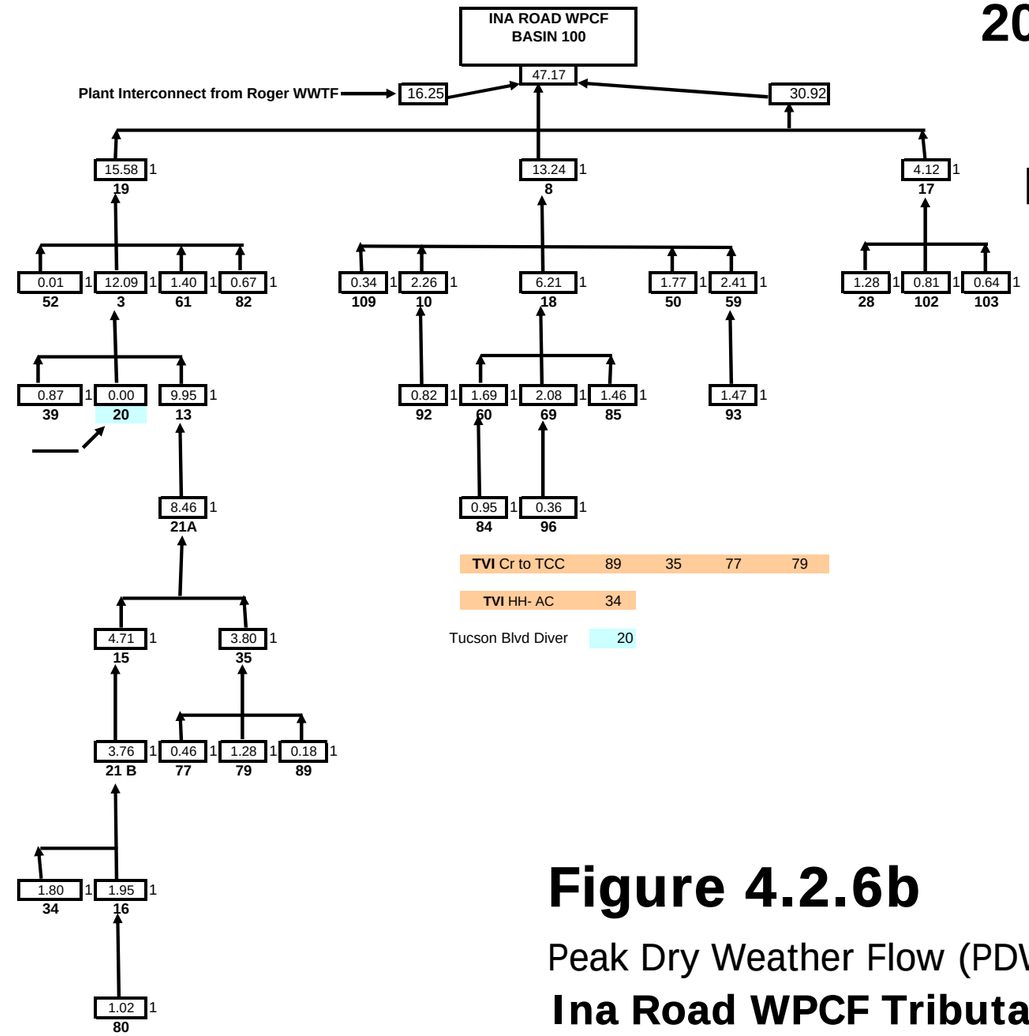

Figure 4.2.6b

Peak Dry Weather Flow (PDWF)

Ina Road WPCF Tributary System

TAZ 2025

2030 Model Results

The results of the model's evaluation of the PCWMD's interceptor system for PDWF in the year 2030 are presented in Figures 4.2.7a. and 4.2.7b for Roger Road WWTP and Ina Road WPCF tributary systems respectively. The sections of the system identified by the Facility Plan Model as being deficient (Red) or requiring further evaluation (Orange) for both the Roger Road WWTP and Ina Road WPCF systems are shown on Figure 4.2.7, Interceptor Capacity Analysis 2025.

The portions of the Interceptors in 2030 that the Facility Plan Model identifies as having deficiencies (Red) or requiring further evaluation (Orange) are shown in the color coded tables on Figures 4.2.7a for the Roger Road WWTP tributary system and on Figure 4.2.7b for the Ina Road WPCF tributary system. The results are graphically shown on a map of PCWMD's entire Interceptor system in Figure 4.2.7. The unique results for 2030 are presented in the following narrative; however, the sections of the Interceptors found deficient (Red) and requiring evaluation (Orange) in 2005, 2010, 2015, 2020 & 2025 will, barring corrective action, be problems in 2030. The following narrative will limit itself to newly identified reaches of Interceptor or reaches that move from requiring evaluation to deficient. Reaches of interceptor found to have problems (either deficient or requiring evaluation) in prior years are considered to not have been repaired and still pose problems in this and future years. The results are:

Deficiencies noted

RED (Flow greater than 85 percent of Pipe Capacity)

Roger Road WWTP System

1. All other deficient basins were identified in 2020 or before.

Ina Road WPCF System

(No Problems.)

ORANGE (Flow greater than basin entrance capacity. Requires further evaluation) 7B 30

Roger Road WWTP System

1. PTI from Wimot and Grant Road to Craycroft and Sutter Lane (Basin 7A). (This section of pipe is downstream from the HAMP, Rocking K Ranch, Civano and the Southeast side, all rapidly growing areas.)
2. SEI from Craycroft and Valencia to Park and I-10 (Basin 11). (The section of pipe is downstream from Vail, HAMP, Rita Ranch and the prisons all areas expected to grow rapidly in the future.)
3. All other deficient basins were identified in 2025 or before.

Ina Road WPCF System

1. Continental Ranch Pump Station Gravity Line from the Santa Cruz River and Yarborough Drive to the Santa Cruz River and Odyssey Way (Basin 17). (This is a shallow slope portion of the interceptor is in a section serving a growing area in the northwest.)

Facility Plan Model Summary

The Pima Association of Governments' June 2005 TAZ population forecast was used as the basis for population distribution among the sewer basins of the PCWMD. PAG updates these forecasts, as they consider necessary, to reflect either significant variations from the assumptions of total population increases or population distribution for the forecast period. PAG's issuance of a new population forecast would be the signal for PCWMD to investigate the impact of the revised forecast upon its conveyance and treatment system.

PCWMD utilizes the TAZ forecasts to determine flows in the conveyance system and to the Treatment Facilities. PCWMD employs the Facility Plan Model to convert TAZ population into sewer basin population. Sewer basin wastewater production is predicted by the application of an average 85 gallons of wastewater produced per capita (person) per day (gpcd) in the basin in the year 2030. The 85 gpcd figure was determined initially as the figure that most closely matched the metered flow in the conveyance system in 2005. Each basin contributes its flow to one of the interceptors where the flow increases until it is discharged into one of the downstream treatment plants. The present flow predictions are generated in five-year increments, matching PAG's population predictions, between 2005 and 2030.

The flow predictions for the Conveyance System tributary to the Roger Road WWTP and Ina Road WPCF plants are presented in both graphic and spreadsheet format. The PDWF flows for the year 2005 were compared to the peak flows of conveyance meters and the plant inflow meters. There is a rough agreement between the calculated and metered readings. The variances are probably due more to the calculated peak flows being more of an "average peak dry weather flow" while the meters record actual real world peak wet weather flows. The metered results presented on the spreadsheets are the maximum flow values (those greater than 99 percent of the recordings) recorded during periods in November and December 2004.

The Facility Plan Model has identified relatively few capacity problems in the PCWMD conveyance system in the next twenty five years. Given the overall system length of 3,300 plus miles and the population growth expected in the service area, the identification of less than a dozen capacity issues is gratifying. Of these few issues several have been anticipated and have been accounted for in the 2004 Bond Authorization (i.e. the NWO relief by the Santa Cruz Interceptor, Prince – Franklin) and the NRI by the Plant Interconnect.

Also, contributing to the scarcity of capacity problems is that the oversizing of gravity sewers involves minimal additional cost during initial installation. The oversized gravity conveyance system functions with minimal additional problems than a capacity sized sewer. Further, gravity sewers involve no mechanical equipment resulting in no high initial equipment costs, no equipment operating costs and no equipment maintenance costs, all of which are normally detriments to oversizing other facilities.

The Facility Plan Model also considers flow diversions whereby flow is diverted from an Interceptor's next downstream basin to either another Interceptor system in the same treatment plant tributary system or into the tributary system for another treatment system. The major such diversion is the diversion of flow from basin 20 on the South Rillito Interceptor (SRI) tributary to Roger Road WWTP to Basin 3 on the North Rillito Interceptor (NRI) tributary to the Ina Road WPCF. This diversion removes 5.35 MGD from the SRI to the NRI in each period from 2005 through 2010. This effectively reduces the treatment load at Roger Road WWTP and increases the load at Ina Road WPCF. The Tucson Boulevard Flow Management Structure flow re-direction falls to zero upon installation of the Plant Interconnect.

The Facility Plan Model, in considering the Ina Road WPCF tributary conveyance system, identified only Basin 19 and on the NRI and Basin 19 on the Continental Ranch Pump Station Gravity Line as having flow exceeding capacity. In the case of Basin 19 and Basin 17 an ORANGE condition occurs in periods from 2005 and 2010 and in year 2030, respectively. It is interesting to note that should 5.35 MGD not be diverted from the SRI to the NRI, Basin 19 would not have issues from 2005 through 2010. The installation of the Roger Road WWTP to Ina Road WPCF plant Interconnect 2004 Bond project prior to 2015 alleviates the identified capacity problem in the NRI. Basin 19 deficiency occurring in year 2030 allows ample time to plan for alleviating this issue.

The Roger Road tributary Conveyance System by contrast exhibits a number of basins identified as issues. The absence of diversion from Basin 20 to Basin 3, discussed above, would not impact the carrying capacity of the SRI conveyance system. The major issues are identified in the text and are summarized here:

The 66-inch diameter Roger Road WWTP entrance pipe between Business Center Drive and the plant develops a capacity problem when the SCIPF and re-directed Tucson Boulevard Flow Management Structure flow use this stretch of pipe. Should the plant interconnect Roger Road start point be at Business Center Drive, this ceases to be a problem.

The Northwest Outfall in Basin 57B from Speedway to the Santa Cruz River crossing is the only RED condition in 2005. The 2004 Bond project, The Santa Cruz Interceptor, Prince to Franklin, when installed, will allow the redirection of flows from the east side of the Santa Cruz River away from the Alameda siphon and the NWO thereby preventing overloading the NWO.

The Southeast Interceptor (SEI) in Basin 51, from Park & I-10 to 18th and Euclid, serves the growing southeast area as well as the Tucson International area Industrial and Commercial area and becomes a RED problem in 2010. Presently there are no Bond or CIP projects addressing this problem.

The Southeast Interceptor in Basin 9 is an ORANGE capacity problem from 2005 through 2030. This section of the SEI is downstream of Basin 51 and has capacity problems along 18th Street from Euclid to Osborne. Presently there are no Bond or CIP projects addressing this problem.

The Southeast Interceptor in Basin 43A from Kolb Road and I-10 to the Rita Ranch area reaches an Orange condition in 2010 through 2020 and graduates to a Red condition in 2025 and 2030. The area east of Houghton Road, (Basin 43B) in response to area growth, becomes a Red condition in 2025 and 2030. The growth of flow in the upstream reaches of the Southeast Interceptor eventually involve Basin 11 in the year 2030. Presently there are no Bond or CIP projects addressing this problem.

The Pantano Interceptor graduates from an Orange condition to a Red condition in individual basin stages from 2010 in Basin 29 to a RED condition from 22nd Street and Pantano Wash to Rocking K Ranch and an Orange condition on the PTI from Craycroft and the Rillito to 22nd street in 2030. As discussed, a Water Reclamation Facility in the vicinity of Harrison Road and Pantano River is being evaluated to help relieve flow and provide reclaimed water for the eastside.

There are other indications for further investigation throughout the system that are considered minor problems caused by the methods of the Facility Plan Model that, upon further engineering investigation, may prove of no consequence. These occur on the Aviation Corridor sewer Central, the Santa Cruz Central, Aviation Corridor sewer South East and the Santa Cruz Interceptors. Details on these situations are outlined in the text.

Conclusions and Recommendations

As summarized in Chapter 4.2 Conveyance Future Conditions, the following new CIP capacity related conveyance projects have been determined to be advisable.

1. Because there are three interceptor locations that were found to be in an 'Orange' condition between 2005 and 2010, the following CIP project is recommended:

   Interceptor Condition Evaluation: Perform an evaluation on the following 3 interceptor locations to determine current Peak Dry Weather Flow conditions and need for expansion;

   a. ACSC - Aviation/Kino diversion structure to 12th and Vine.

   b. ACSE - From Golf Links/Veteran's Memorial siphon to Silverlake and Aviation Parkway.

   c. SRI - From Glenn and Alvernon to Glenn west of Country Club.

2. Since the SEI is 'Orange' from 2005 at Euclid and 18th to Osborne and 18th and

   'Red' after 2010 at Park and I-10 to 18th and Euclid, the following CIP project is recommended:

   SEI: 18th and Osborne to Park and I-10 – the scope will include a preliminary engineering report to determine the need for expansion over the entire length so only the reaches in need of expansion will be constructed.

3. The Facility Plan Model has only considered the interceptor system for pipe sizes greater than 15 inch and greater in diameter. Capacity in the intermediate or trunk system in 10, 12 and 15-inch size pipe requires study to identify possible capacity problems.

4. Conduct a study of the PTI and SEI in the area east of Kolb Road to determine if Treatment Plants such as the Pantano and Harrison and the Kolb and I-10 proposed facilities would relieve conveyance problems on these two interceptors.

In other cases, PCWMD has to wait to see how areas in the southeast develop before investigating potential capacity problems. And, as previously mentioned, construction of the SCI: Prince to Franklin will relieve the Alameda Siphon and Northwest Outfall flows that currently appear as capacity problems. It will also allow the closure of the SCC upon rehabilitation and some flow diversions of portions of the SCE along I-10.

Additionally, as already noted, the construction of the Plant Interconnect will relieve the NRI from the capacity problems indicated.

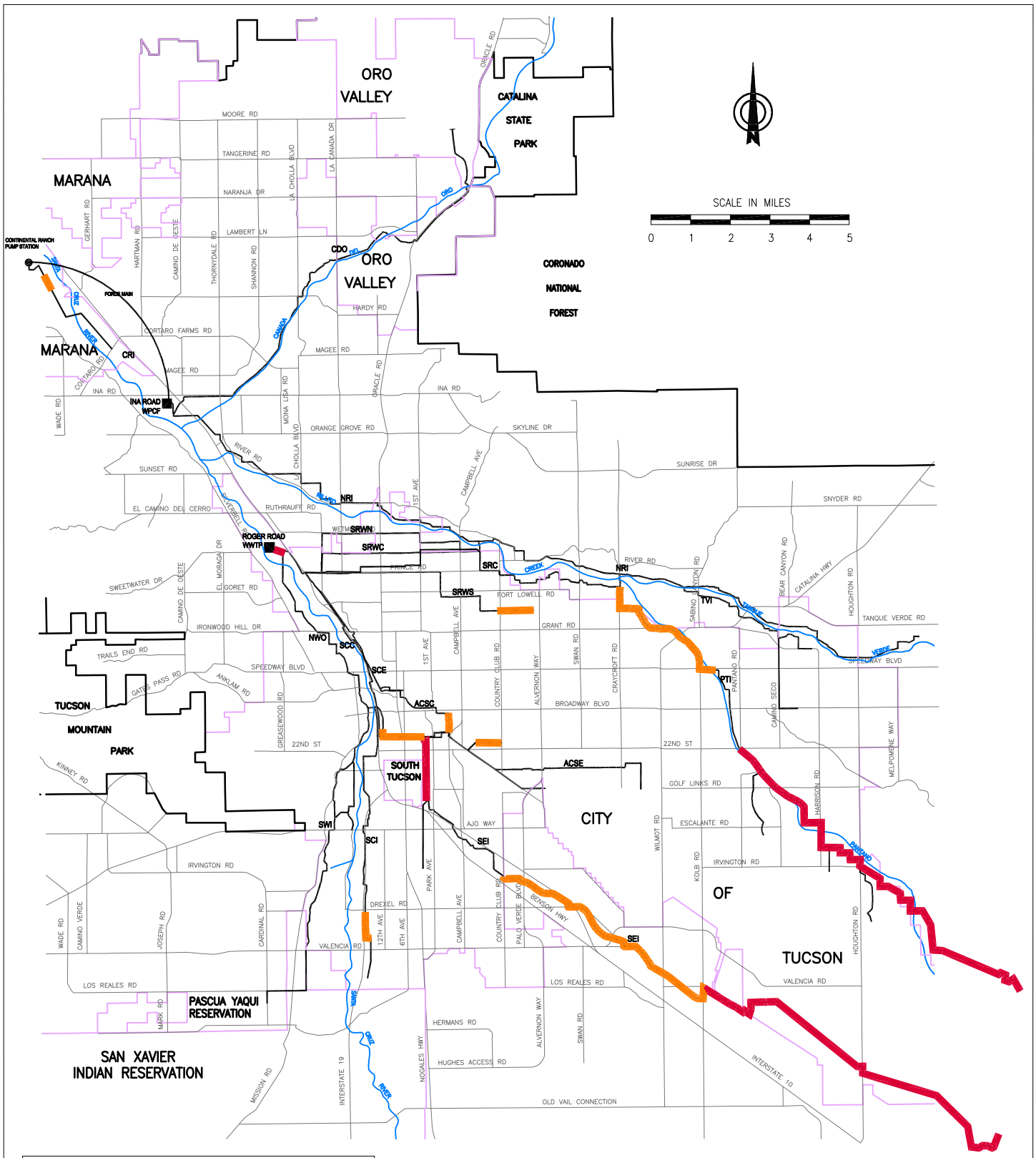

LEGEND

DEFICIENT (Calculated Basin Exit Flow is Greater Than 85% of Full Pipe Capacity at the Basin Exit)

FURTHER (Calculated Basin Inlet Flow is Greater Than 85% of Full Pipe Capacity Somewhere Within the Basin)

Pima County Wastewater Management Department
Facility Plan Update

Figure 4.2.7
Capacity Analysis 2030

2030 TAZ

ROGER

PDWF

Basin No.		Basin Population on sewer 2030	Interceptor Flow **ADWF**	Basin Flow **ADWF**	**Peak Factor**	**PDWF** mgd	**CAPACITY** 85% Full Pipe Capacity ENTER	EXIT	**Over Exit Capacity Indicator**	**Over Enterance Capacity Indicator**	
1A		6,982	2.24	0.59	1.75	**3.93**	5.93	10.11	6.18	2.01	##
1B		6,621	0.56	0.56	1.92	**1.08**	1.70	9.40	8.32	0.62	##
2		15,467	1.31	1.31	1.78	**2.34**	2.98	3.66	1.31	0.63	##
4		11,613	1.40	0.99	1.83	**2.55**	2.37	6.67	4.12	(0.18)	##
5A		628	52.12	0.05	1.38	**71.74**	204.20	52.32	-19.42	132.47	##
5B		3,177	22.11	0.27	1.46	**32.26**	62.93	50.80	18.55	30.67	##
6		25,590	4.84	2.18	1.61	**7.79**	9.65	16.94	9.15	1.85	##
7A		5,047	11.31	0.43	1.52	**17.22**	15.95	22.92	5.70	(1.26)	##
7B		11,668	10.28	0.99	1.53	**15.75**	13.35	15.95	0.20	(2.40)	##
9		11,720	18.96	1.00	1.46	**27.77**	15.95	64.16	36.39	(11.81)	##
11		25,730	12.96	2.19	1.51	**19.60**	17.94	22.94	3.34	(1.66)	##
14		9,431	0.80	0.80	1.86	**1.49**	0.00	6.53	5.04	(1.49)	##
20		13,992	16.43	1.19	1.49	**24.42**	36.35	43.32	18.91	11.94	##
22		808	1.63	0.07	1.62	**2.65**	6.51	12.02	9.37	3.86	##
23		17,378	3.72	1.48	1.66	**6.18**	10.11	14.29	8.10	3.92	##
24		12,059	28.21	1.03	1.61	**45.36**	64.16	64.16	18.80	18.80	##
25A		1,975	3.28	0.17	1.63	**5.36**	9.97	34.16	28.80	4.61	##
25B		7,211	2.17	0.61	1.68	**3.64**	4.00	6.83	3.18	0.36	##
26		18,874	9.29	1.60	1.54	**14.33**	16.13	14.65	0.32	1.81	##
27A		4,859	2.90	0.41	1.71	**4.97**	7.68	12.37	7.40	2.72	##
27B		582	0.05	0.05	2.58	**0.13**	0.00	2.93	2.81	(0.13)	##
27C		7,067	0.60	0.60	1.91	**1.15**	0.00	3.12	1.97	(1.15)	##
29		8,340	5.92	0.71	1.59	**9.40**	3.41	4.82	-4.58	(5.99)	##
30		5,871	7.68	0.50	1.56	**11.99**	10.05	10.05	-1.94	(1.94)	##
31		14,863	1.26	1.26	1.79	**2.26**	0.00	3.41	1.15	(2.26)	##
32		7,161	21.61	0.61	1.46	**31.57**	79.93	62.93	31.35	48.35	##
33		11,184	3.01	0.95	1.68	**5.06**	7.79	8.81	3.75	2.73	##
36		3,317	0.28	0.28	2.07	**0.58**	0.00	1.70	1.12	(0.58)	##
42		3,828	15.24	0.33	1.49	**22.76**	45.18	42.61	19.85	22.42	##
43A		32,372	9.75	2.75	1.63	**15.84**	4.59	11.85	-3.99	(11.25)	##
43B		49,672	4.22	4.22	1.54	**6.51**	0.00	4.17	-2.34	(6.51)	##
44		4,041	0.34	0.34	2.02	**0.70**	2.31	7.15	6.45	1.62	##
45		11,827	1.41	1.01	1.82	**2.56**	3.06	13.52	10.95	0.50	##
46		13,519	1.56	1.15	1.76	**2.73**	2.41	3.88	1.15	(0.32)	##
48		3,937	0.33	0.33	2.03	**0.68**	0.00	1.95	1.27	(0.68)	##
49		9,012	0.77	0.77	1.87	**1.43**	0.00	3.04	1.61	(1.43)	##
51		10,323	16.74	0.88	1.49	**24.97**	12.98	12.98	-11.99	(11.99)	##
53		2,697	0.23	0.23	2.11	**0.48**	0.00	1.12	0.64	(0.48)	##
54		216	2.39	0.02	1.70	**4.06**	16.01	13.70	9.64	11.96	##
56		11,022	0.94	0.94	1.83	**1.72**	0.00	2.52	0.80	(1.72)	##
57A		4,296	5.97	0.37	1.43	**8.54**	17.70	27.15	18.61	9.15	##
57B		11,869	7.32	1.01	1.43	**10.44**	27.15	24.77	14.33	16.71	##
57C		3,066	0.26	0.26	2.08	**0.54**	0.00	3.90	3.36	(0.54)	##
63		7,043	0.60	0.60	1.91	**1.14**	0.00	4.29	3.15	(1.14)	##
70		8,738	1.83	0.74	1.73	**3.18**	6.60	9.65	6.47	3.42	##
71		19,852	2.49	1.69	1.74	**4.34**	0.00	7.88	3.54	(4.34)	##
73		4,460	0.38	0.38	2.00	**0.76**	0.00	10.05	9.29	(0.76)	##
74		16,205	1.85	1.38	1.73	**3.20**	7.05	6.48	3.27	3.84	##
75		15,215	2.17	1.29	1.71	**3.71**	2.71	3.72	0.01	(1.00)	##
76		5,582	0.47	0.47	1.96	**0.93**	0.00	1.52	0.59	(0.93)	##
78		15,117	2.72	1.28	1.68	**4.57**	3.81	5.40	0.83	(0.76)	##
81		20,357	1.73	1.73	1.74	**3.01**	0.00	3.18	0.17	(3.01)	##
86		14,184	1.21	1.21	1.79	**2.16**	0.00	6.60	4.43	(2.16)	##
87		3,346	1.60	0.28	1.75	**2.80**	3.66	8.77	5.97	0.85	##
88		16,901	1.44	1.44	1.77	**2.54**	0.00	3.80	1.26	(2.54)	##
94		12,844	1.09	1.09	1.81	**1.98**	0.00	3.90	1.93	(1.98)	##
95		10,353	0.88	0.88	1.84	**1.62**	0.00	2.71	1.09	(1.62)	##
97		27,937	2.37	2.37	1.70	**4.03**	0.00	7.81	3.78	(4.03)	##
99		0	43.47	0.00	1.38	**59.81**	78.20	78.20	18.39	18.39	##
111		9,786	0.83	0.83	1.85	**1.54**	0.00	5.29	3.75	(1.54)	##
113		61,311	5.21	5.21	1.60	**8.35**	0.00	3.94	-4.41	(8.35)	##
114		4,777	0.41	0.41	1.99	**0.81**	0.00	1.09	0.28	(0.81)	##
20A				0.00	1.17	**0.00**					##

12

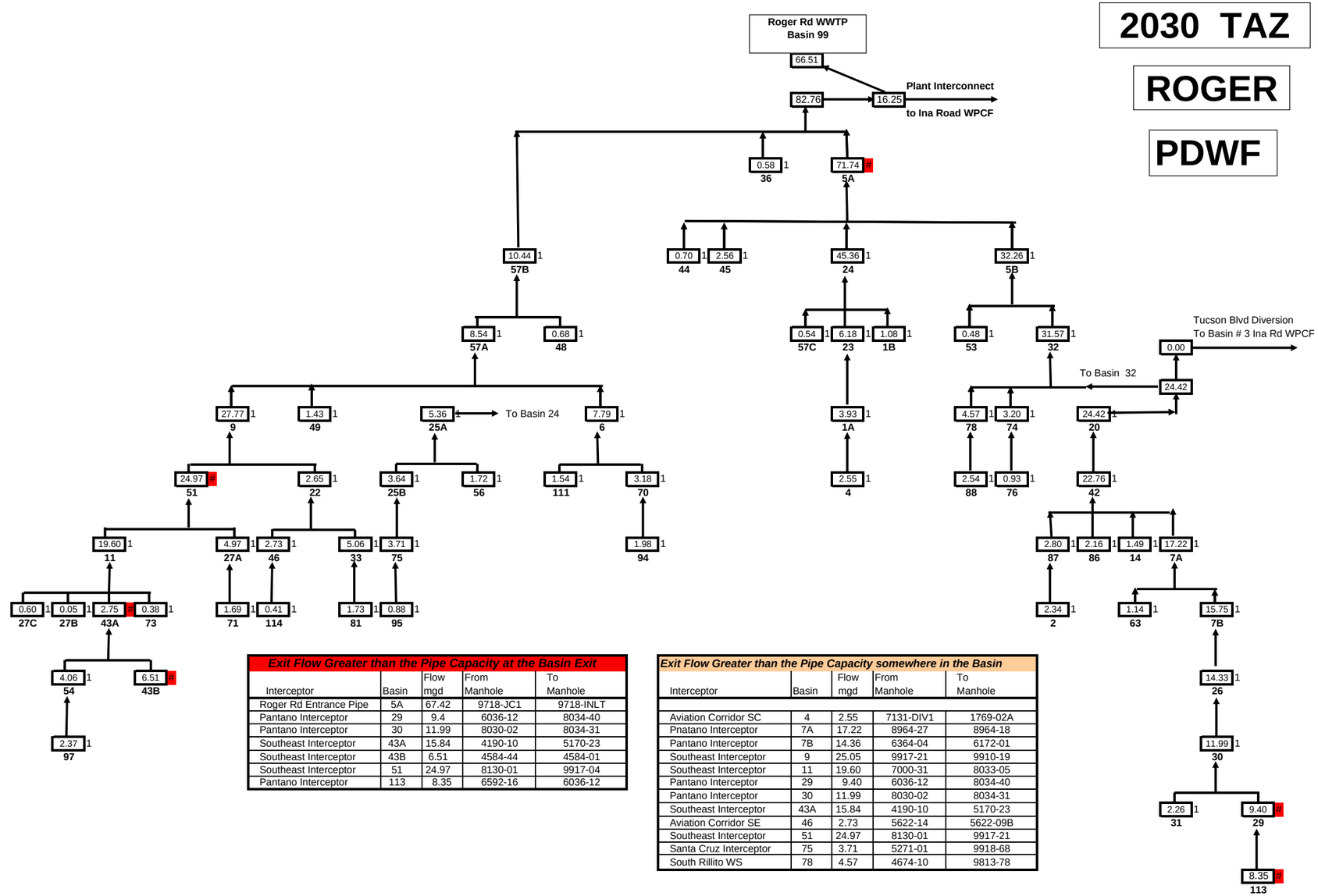

Exit Flow Greater than the Pipe Capacity at the Basin Exit

Interceptor	Basin	Flow mgd	From Manhole	To Manhole
Roger Rd Entrance Pipe	5A	67.42	9718-JC1	9718-INLT
Pantano Interceptor	29	9.4	6036-12	8034-40
Pantano Interceptor	30	11.99	8030-02	8034-31
Southeast Interceptor	43A	15.84	4190-10	5170-23
Southeast Interceptor	43B	6.51	4584-44	4584-01
Southeast Interceptor	51	24.97	8130-01	9917-04
Pantano Interceptor	113	8.35	6592-16	6036-12

Exit Flow Greater than the Pipe Capacity somewhere in the Basin

Interceptor	Basin	Flow mgd	From Manhole	To Manhole
Aviation Corridor SC	4	2.55	7131-DIV1	1769-02A
Pnatano Interceptor	7A	17.22	8964-27	8964-18
Pantano Interceptor	7B	14.36	6364-04	6172-01
Southeast Interceptor	9	25.05	9917-21	9910-19
Southeast Interceptor	11	19.60	7000-31	8033-05
Pantano Interceptor	29	9.40	6036-12	8034-40
Pantano Interceptor	30	11.99	8030-02	8034-31
Southeast Interceptor	43A	15.84	4190-10	5170-23
Aviation Corridor SE	46	2.73	5622-14	5622-09B
Southeast Interceptor	51	24.97	8130-01	9917-21
Santa Cruz Interceptor	75	3.71	5271-01	9918-68
South Rillito WS	78	4.57	4674-10	9813-78

1 **Randolph Park WRF at 3.0 mgd.**
2 **SCIPF in Operation**
3 **The Roger to Ina Plant Interconnect is in service and no flow is diverted to Ina at Tucson Blvd.**
4 **Wastewater is Conveyed from Roger to Ina by Plant Interconnector. 16.25 MGD**

Figure 4.2.7a

Peak Dry Weather Flow (PDWF)

Roger Road Tributary System

TAZ 2030

1/20/06

Basin No	Basin Population 0n Sewer 2030	Interceptor Flow **ADWF**	Basin Flow **ADWF**	**Peak Factor**	**PDWF** mgd	**CAPACITY** 85% Full Pipe Capacity ENTER	EXIT	**Over Exit Capacity Indicator**	**Over Entrance Capacity Indicator**	
3	15,214	8.07	1.06	1.54	**12.42**	22.04	20.33	7.91	9.62	##
8	11,794	9.05	1.06	1.55	**14.01**	17.09	33.25	19.25	3.08	##
10	9,530	1.27	0.86	1.79	**2.28**	3.37	5.79	3.51	1.09	##
13	14,975	6.54	1.05	1.56	**10.20**	0.00	27.74	17.54	(10.20)	##
15	9,008	2.94	0.63	1.65	**4.85**	12.06	11.30	6.45	7.22	##
16	8,073	1.11	0.57	1.79	**1.98**	3.69	4.69	2.71	1.70	##
17	13,629	2.67	1.16	1.68	**4.48**	4.17	32.62	28.14	(0.31)	##
18	11,332	4.07	0.96	1.63	**6.63**	7.50	17.09	10.45	0.86	##
19	20,111	10.61	1.41	1.51	**16.03**	20.34	28.26	12.23	4.31	##
20	0	0.00	0.00	1.17	**0.00**	9.18	17.48	17.48	9.18	##
21A	3,732	5.49	0.24	1.58	**8.66**	11.30	11.30	2.64	2.64	##
21B	2,125	2.31	0.15	1.68	**3.88**	7.82	7.63	3.75	3.94	##
28	8,977	0.72	0.72	1.87	**1.34**	0.00	3.17	1.83	(1.34)	##
34	15,021	1.05	1.05	1.79	**1.88**	0.00	6.57	4.69	(1.88)	##
35	18,625	2.31	1.30	1.67	**3.87**	5.08	6.36	2.48	1.21	##
39	5,437	0.46	0.46	1.96	**0.91**	0.00	3.55	2.65	(0.91)	##
50	12,611	1.07	1.07	1.81	**1.94**	0.00	4.32	2.37	(1.94)	##
52	15	0.00	0.00	6.06	**0.01**	0.00	0.43	0.43	(0.01)	##
59	6,339	1.42	0.57	1.77	**2.51**	12.02	4.36	1.85	9.51	##
60	5,310	0.99	0.45	1.83	**1.80**	2.52	3.73	1.93	0.72	##
61	11,292	0.79	0.79	1.83	**1.45**	0.00	3.71	2.26	(1.45)	##
69	12,122	1.26	1.09	1.79	**2.26**	2.77	10.00	7.73	0.51	##
77	3,153	0.22	0.22	2.08	**0.46**	0.00	2.52	2.06	(0.46)	##
79	10,180	0.71	0.71	1.85	**1.32**	0.00	6.48	5.16	(1.32)	##
80	6,386	0.54	0.54	1.93	**1.05**	0.00	2.52	1.47	(1.05)	##
82	4,885	0.34	0.34	1.98	**0.68**	0.00	1.74	1.07	(0.68)	##
84	6,281	0.53	0.53	1.93	**1.03**	0.00	4.20	3.17	(1.03)	##
85	10,077	0.86	0.86	1.85	**1.58**	0.00	6.16	4.58	(1.58)	##
89	1,081	0.08	0.08	2.35	**0.18**	0.00	4.01	3.83	(0.18)	##
92	4,588	0.41	0.41	2.00	**0.82**	0.00	1.47	0.65	(0.82)	##
93	9,961	0.85	0.85	1.85	**1.57**	0.00	8.73	7.16	(1.57)	##
96	2,011	0.17	0.17	2.19	**0.37**	0.00	1.85	1.48	(0.37)	##
102	5,227	0.44	0.44	1.97	**0.88**	0.00	3.01	2.13	(0.88)	##
103	4,098	0.35	0.35	2.02	**0.70**	0.00	2.46	1.75	(0.70)	##
109	1,760	0.16	0.16	2.22	**0.35**	0.00	3.17	2.82	(0.35)	##
100	0	22.33		1.45	**32.39**					##

Exit flow greater than the Pipe Capacity at the Basin Exit

Interceptor	Basin	Flow mgd	From Manhole	To Manhole

Exit flow greater than the Pipe Capacity at the Basin Exit

Interceptor	Basin	Flow mgd	From Manhole	To Manhole
Countinental Ranch Pump Station Gravity Line	17	4.48	5290-18	5290-116

The Roger to Ina Plant Interconnect is in service and no flow is diverted to Ina.

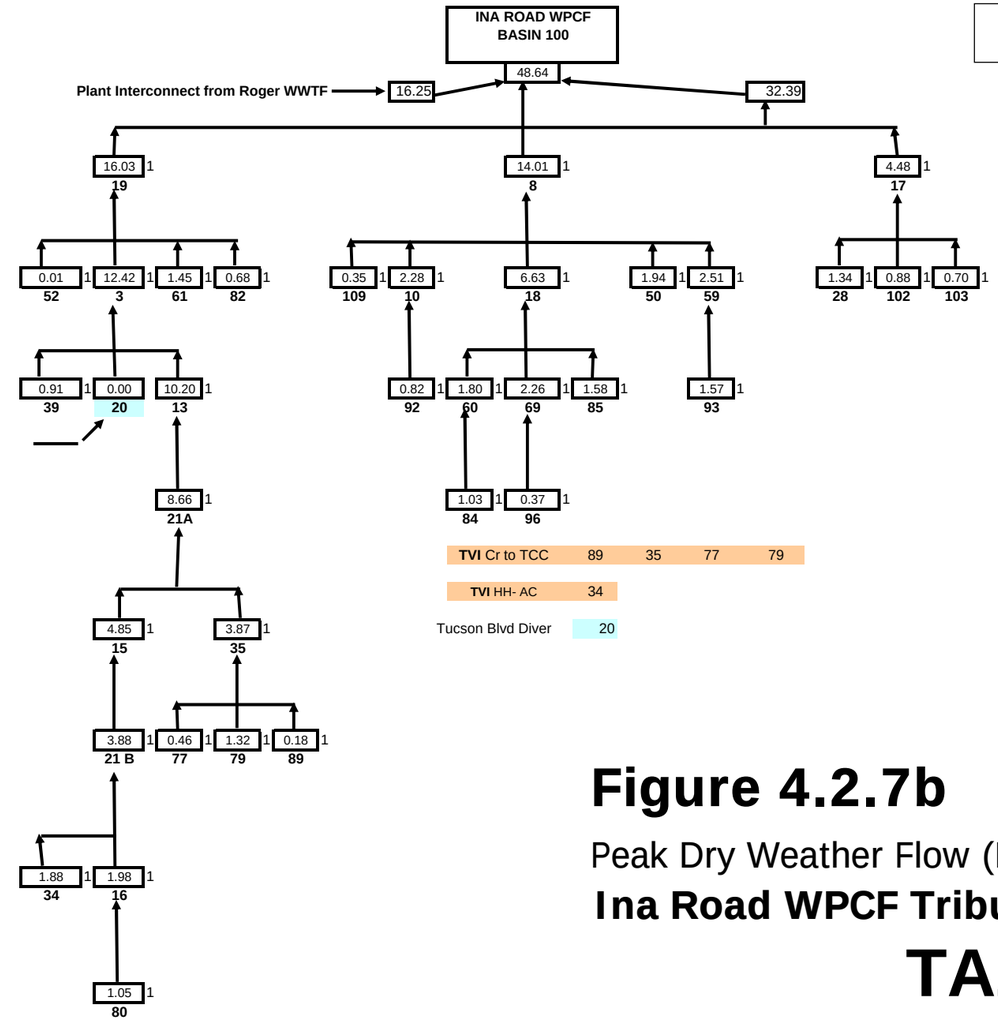

2030 TAZ

INA

PDWF

Figure 4.2.7b

Peak Dry Weather Flow (PDWF)

Ina Road WPCF Tributary System

TAZ 2030