Appendix T

FACTSHEET

Smith & Loveless, Inc.
Manufacturers of quality wastewater systems **1-1246**

The Factory-Built ADDIGEST® Treatment Plant

The Factory Built **ADDIGEST** is an aerobic wastewater treatment system designed for both municipal and industrial applications. The trade name **ADDIGEST** is derived from "add-on-digestion" and attests to the versatility of this system. It offers treatment from basic BOD and TSS removal to nutrient removal and advanced treatment.

The **ADDIGEST** *has proven itself in hundreds of installations.*

Design Flexibility

- Customize the system for any level of treatment – ranging from basic BOD removal to advanced treatment suitable for water reuse.
- Provide treatment for extended aeration loadings to 56,000 gpd (212 m^3/d) in a single manufactured tank. For larger capacity, see Factsheet 2-1246 on the Field-Erected **ADDIGEST**.
- Add either hopper bottom type clarifiers or all steel circular clarifiers with rotating sludge collectors easily.
- Choose either above or below grade installation.
- Meet space requirements with end-to-end or side-by-side installation, ensuring an efficient footprint for multiple tank installations.
- Simplify restrictive shipping limitations with the availability of component and weld together units.

The Benefits

- Design offers virtually unlimited capacity and wastewater treatment capabilities.
- V-crimped walls provide greater rigidity and economy in manufacturing, while minimizing weight.
- Design makes the Factory-Built **ADDIGEST** easy to install and operate with little routine maintenance. There are virtually no moving parts.
- Inspection occurs on every Factory-Built **ADDIGEST** prior to shipment, ensuring quality.
- V-crimped structural walls create greater volume per unit-dimension than a circular cross section, reducing corrosion compared to plants with I-beams for structural reinforcement.
- **VERSAPOX®** coating on all surfaces ensures the best resistance against corrosion and abrasion.

Smith & Loveless, Inc.

FACTSHEET

Factory-Built ADDIGEST

Various treatment configurations can be achieved with the versatile Factory-Built **ADDIGEST** *to meet effluent requirements ranging from pretreatment to reuse. The Factory-Built* **ADDIGEST** *also comes in full hopper clarifier and circular clarifier configurations.*

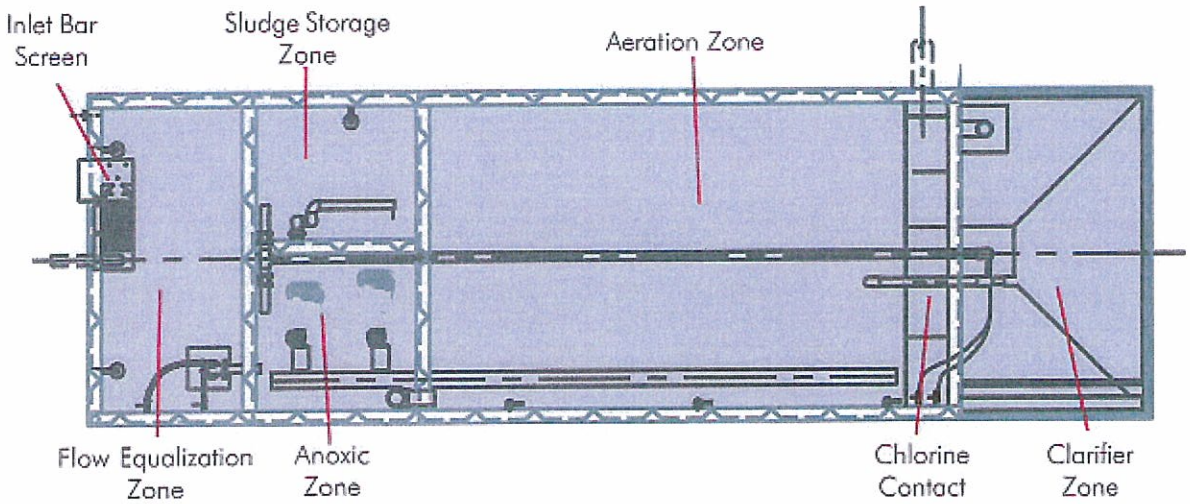

More Benefits

- Electrical controls and instrumentation, air blowers, walkways, grating, access ladders and other accessories are readily available to provide a complete installation.
- Installation ready, the Factory-Built **ADDIGEST** can be installed upon arrival, reducing standard delivery time, erection time and installation costs.
- Smith & Loveless provides single-source responsibility, from design and process engineering to manufacturing and installation.

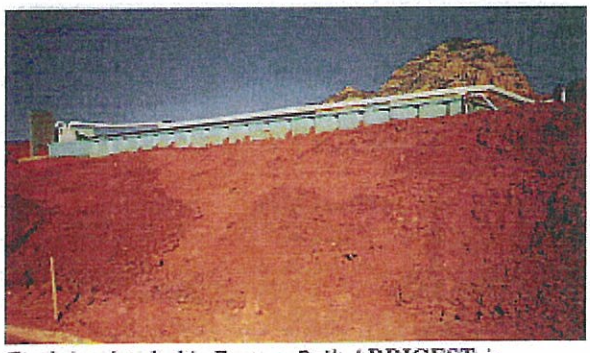

Earth-insulated, this Factory-Built **ADDIGEST** *is installed below grade, as shown above.*

Add-On-Digestion

Flexibility is the key to the Factory-Built **ADDIGEST.** The basic unit is equipped with an aeration tank and a clarifier. To this basic unit, several components can be added to meet effluent requirements including:

- Flow Equalization
- Clarification
- Sludge Storage
- Filtration
- Disinfection (Chlorination or UV)
- Post Aeration
- Dechlorination
- Nutrient Removal (Nitrogen and Phosphorus)
- Nitrification

Smith & Loveless, Inc.
14040 Santa Fe Trail Drive
Lenexa, KS 66215-1284
United States of America
Phone: 913-888-5201
Fax: 913-888-2173
Parts: 800-922-9048

http://www.smithandloveless.com
E-mail: answers@smithandloveless.com

©1998 Smith & Loveless, Inc.

Solutions for a world of water problems

PACKAGE TREATMENT PLANT
ENGINEERING ORDER

LOCATION Marana, AZ SERIAL NUMBER 37-00187-P

Model No. 12AD50
Above Grade (X) (See Specials)
Average Flow 50,000 GPD Organic Loading 150 mg/l
Total Length 54.5′ Mode Of Operation Extended Operation
No. of Tanks 2 (Separate Tank)

COMPARTMENTS:

Sludge Storage: 6,000 Min. Gallons 8′-6″ Length 9′-0″ Wide
Aeration Zone: 34,750 Min. Gallons 36.9′ Length
Clarifier Zone: HC-142 Model 12′-0″ Length
Anoxic Zone: 4,150 Min. Gallons 8′-10″ Length
Chlorination Zone: 1800 Min. Gallons 8′-6″ Length x 3′ Wide

BLOWERS:

Quantity 2 Model No. 7L320 Mfg.
CFM 311 RPM 2169 PSI 6.0

MOTORS:

Horsepower 15 RPM 1800 Electrical 3 Ph/60 HZ/460 Volt
ODP X

ACCESSORIES:

Control Panel NEMA 3R - Provide controls for all blowers - Two 15 HP blowers and mixers.

Painting: Versapox®

SPECIAL REQUIREMENTS

1. Make this a mirror-image of S/N 37-00186-P, with the service platform on the chlorinator side of the tank.

2. Provide plant 12′-0″ wide x 11-1/2′ tall x 54′-2″ long.

3. Influent conditions are noted below:

   BOD - 150 mg/l
   TSS - 200 mg/l
   TKN - 48 mg/l
   NH_3 - 38 mg/l

   Effluent Requirements:
   BOD - 20 mg/l
   TSS - 20 mg/l
   TKN - <10 mg/l ✓

   Elevation is 2,000 ft. ASL.

SPECIAL MATERIALS

Location: Marana, AZ

Serial Number 37-00187-P
Page No. 2

4. Air Requirements:

   Recycle Airlift - 65 cfm
   Sludge Storage - 16 cfm
   Aeration Tank - 212 cfm
   Chlorination Tank - 8 cfm
   Clarifier - 10 cfm

5. Provide an aluminum access ladder to top of plant.

6. Provide two anoxic mixers (one for each zone).

7. Provide one (1) two-diffuser drop pipe for the sludge storage zone.

8. Provide six (6) four-diffuser drop pipes for the aeration zone.

9. Provide one (1) Sanuril Model 1000 chlorinator in the chlorination zone with the baffles used as the mixers.

10. Provide a walkway for maintenance for the anoxic mixers.

11. Provide a 3" flange in the sludge storage zone for sludge removal.

12. Provide one (1) 3-way splitter capable of handling 150,000 GPD. Initially only two units will be online requiring only 100,000 GPD. Provide a blind flange to prevent flow to the future site of the third Addigest®.

13. Provide 8" recycle airlift capable of recycling 52 GPM.

SALES ENGINEERING		MAINTENANCE MANUAL	QTY.	COMPANION S/N
PREPARED BY	DATE	Preliminary Copies	0	37-00186-P
		M.C. Copy	1	
		Start-Up Copy	1	
		Equipment Copies	1	
		Rep Copy	0	
		Customer	0	
C. Berger	5-25-00	Total O&M's	3	

SPECIFICATIONS FOR FACTORY-BUILT ADDIGEST® TREATMENT PLANTS

MARANA, AZ – 37-00186, 87-P

GENERAL

The contractor shall furnish and install two Smith & Loveless Model 12 AD 50 Factory-Built **ADDIGEST®** Treatment Plants as shown on the drawings and specified herein. Similar units may be provided for parallel operation where the total capacity justifies such construction. Each plant shall be of the extended aeration type employing separate compartments for aeration chlorination, sludge holding, and clarification. The **ADDIGEST** Treatment System shall be capable of treating an average total flow of 100,000 gallons per day with a total organic loading of 125.1 pounds of 5-day BOD per day.

CONSTRUCTION

Each **ADDIGEST** shall form a complete wastewater treatment plant shippable in two major sections. All steel plate forming the bottom, side walls, end plates, trough, partitions and other shell tankage shall be minimum 1/4" thick structural grade steel reinforced as required to withstand all hydrostatic pressures. All major treatment and holding zones shall be completely dewaterable, independently, when installed on grade.

All welded steel structural members shall be joined by electric arc welding with fillets of adequate section for the joint involved. Where required for additional strength or watertight integrity, such welds shall be continuous inside and out. Inlet and outlet connections shall be as shown on the drawings.

AERATION

The total aeration volume for each **ADDIGEST** shall be 34,750 cubic feet. Dimensions shall be as shown on the drawings. Each air supply header shall be provided with air connection couplings, drop pipes and diffusers as shown. A 1" air hose shall be provided between the aeration tank and the clarifier for air supply to the airlift pump. Each two inch galvanized pipe diffuser shall extend from the air supply header through a 2" ball valve. The ball valves shall provide for individual throttling of the air flow.

SLUDGE RETURN

A rectangular steel sludge return trough shall extend the full length of each aeration tank. A sludge gate and air relief vent shall be provided as shown. A 4" diameter sludge return pipe shall be installed between the aeration tank and clarifier as shown on the drawings.

CLARIFIER

The clarifier shall be a welded steel structure, rectangular in plan section and shall have one or more sludge hoppers. The walls shall be structural grade steel plate not less than 1/4" thick. All structural shapes used for reinforcing and bracing shall have 1/4" minimum thickness in the thinnest section. All welded steel structural members shall be joined by electric arc welding with fillets of adequate section for the joint involved. Where required for additional strength or watertight integrity, such welds shall be continuous inside and out. Coating shall be as specified herein. Inlet and outlet connections shall be as shown on the drawings.

The clarified liquid shall pass over the edges of the effluent weir, into the effluent trough, which shall be connected to the clarifier outlet pipe. The adjustable weir plate shall be 1/8" aluminum plate and shall have 1" deep 90° V-notches spaced approximately 4" apart. The scum baffle shall be 1/4" steel plate x 6" deep welded to the tank wall.
The clarifier surface area shall be 144 sq. ft.

© Smith & Loveless, 1998

SLUDGE HOLDING TANK

The sludge holding tank of each **ADDIGEST** shall have a capacity of 6,000 gallons. Air shall be distributed to the sludge holding tank through S&L **MULTIFUSER®** diffusers, and all necessary air control valves shall be provided. Dimensions shall be as shown on the drawings.

CHLORINE CONTACT TANK

The chlorine contact tank shall have a capacity of 1800 gallons with underflow inlet baffle and provisions for mounting chlorination equipment. Dimensions shall be as shown on the drawings.

BLOWERS AND MOTORS

Two blowers shall be furnished by the Manufacturer of the treatment plant, each to deliver 311 CFM of free air measured at the blower inlet. Blowers shall be rotary positive displacement type with guarded V-belt connection to the motors. Blowers shall be equipped with filter silencers with weather-hood and specially built check valve.

Each blower shall be driven by a 15 HP, 1750 RPM, 3 volt, 60 phase, 460 Hertz, horizontal open drip-proof, ball bearing electric motor.

Motors shall be mounted on a steel base plate with slots provided for adjustment. The motors shall have a 15% service factor but shall not be overloaded beyond the nameplate rating at the design conditions specified above.

Blower/motor units shall be off-plant mounted in close proximity to the plant. They are to be installed by the purchasing contractor.

ELECTRICAL CONTROLS

The electrical components shall be furnished in a NEMA 3R rain-tight cabinet with stand. The cabinet and stand shall be mounted by the purchasing contractor on the concrete blower pad. A separate thermal magnetic circuit breaker and magnetic contactor shall be furnished for each blower motor. Blower starters shall be controlled by a selector switch. Starters for 3-phase circuits shall have overload and under voltage release protection on each conductor.

A separate 115-volt, single-phase supply circuit breaker shall be provided for control circuits and auxiliary equipment. A manual starter with thermal overload protection shall be provided for all auxiliary motor-driven devices furnished with the **ADDIGEST** Treatment Plant.

Wiring in the control cabinet shall be color-coded and shall be in accordance with the National Electrical Code.

All conduit and wiring between the electrical control panel enclosure and the various motors furnished with the **ADDIGEST** Treatment Plant and between the panel and the power utility pole shall be furnished and installed by the purchasing contractor.

WELDING

All steel structural members shall be joined by electric arc welding with fillets of adequate section for the joint involved. Where required for additional sectional strength, such welds shall be continuous inside and out.

© Smith & Loveless, 1998

SMITH & LOVELESS ENGINEERING STANDARDS & SPECIFICATIONS			7L320
AIR BLOWER – SUTORBILT CALIFORNIA LEGEND SERIES			SHEET 1 OF 6
DATA PROCESSING DESCRIPTION	BLOWER, SUTORBILT	PLOT SCALE 1=1.000	UNIT OF MEAS. EA
BY R. DIEHM	SUPERSEDES NEW N91-42 10/91	REVISED N96-75 9/96	

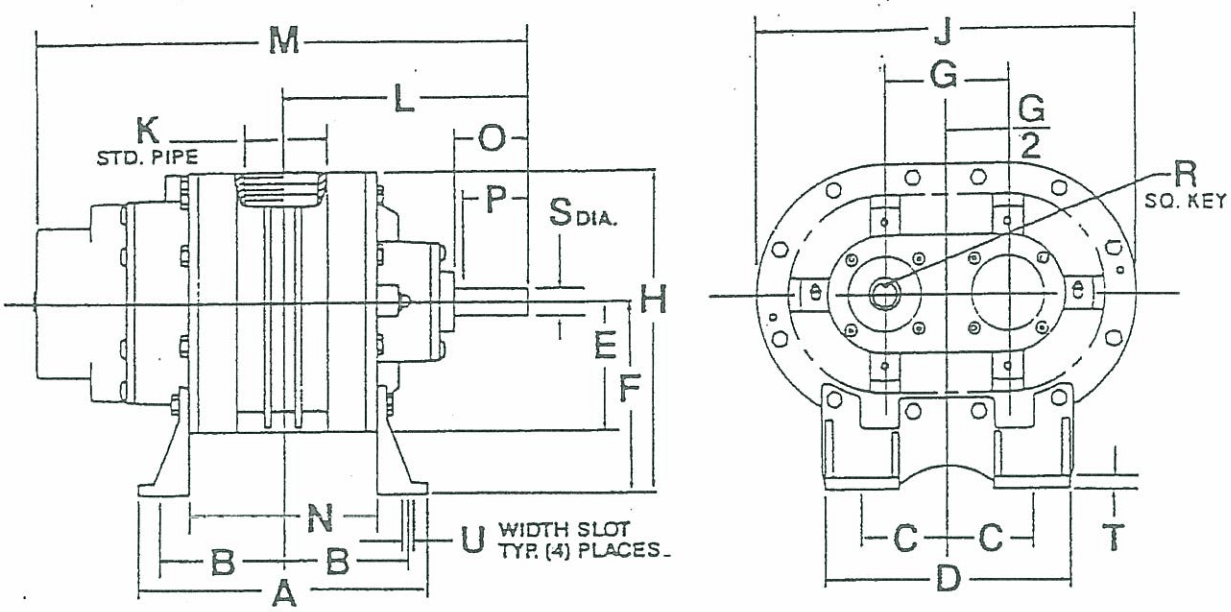

	SIZE	WEIGHT	A	B	C	D	E	F	G	H	J	K	L	M	N	O	P	R	S	T	U
7L320A	2MP	36	5	2	2	6⅞	3¼	3¾	2¾	7	9¼	1	5 5/32	10¼	2¾	1 15/16	1¼	3/16	.625	⅛	7/16
7L320B	3MP	79	7⅝	3 1/16	2⅞	7¾	3⅞	5	3½	8⅞	11¼	2	6¼	12¾	3⅝	1 15/16	1⅛	3/16	.750	¼	½
7L320C	4MP	125	9½	4⅛	3	8	4 3/16	6¼	4	10 7/16	12⅜	2½	8	15 1/16	5½	2⅜	1⅜	3/16	.875	⅜	½
7L320D	5MP	237	10½	4½	3½	9	5 3/16	7	5	12 3/16	15⅜	4	9 3/16	19 3/16	6	2½	1½	¼	1.125	⅜	9/16
7L320E	2LP	39	7	3	2	6⅞	3¼	3¾	2¾	7	9¼	2	6 5/32	12¼	4¾	1 15/16	1¼	3/16	.625	⅛	7/16

NOTES:

1. CENTER TIMED FOR ROTATION IN EITHER DIRECTION.
2. SCREWED CONNECTIONS STD. NPT.
3. INLET AND OUTLET PIPE CONNECTIONS SAME TYPE AND SIZE.

Form 14-09-107 (Rev. 10/00)

SMITH & LOVELESS ENGINEERING STANDARDS & SPECIFICATIONS			SYMBOL 7L320 7630D
TITLE AIR BLOWER – SUTORBILT CALIFORNIA LEGEND "P" SERIES 5MP LEFT HAND CENTRAL			SHEET 5 OF 6
DATA PROCESSING DESCRIPTION	BLOWER, SUTORBILT 5MP	PLOT SCALE 1 : 1	UNIT OF MEAS. EA
BY R. DIEHM	SUPERSEDES N91-42 10/91	REVISED N96-75 9/96	

MODEL 5M

P-VERSION

PRESSURE PERFORMANCE CURVE

INLET AIR AT 68 DEG F, 14.7 PSIA, SPECIFIC GRAVITY = 1.0

DISPLACEMENT 0.21 FT^3/REV

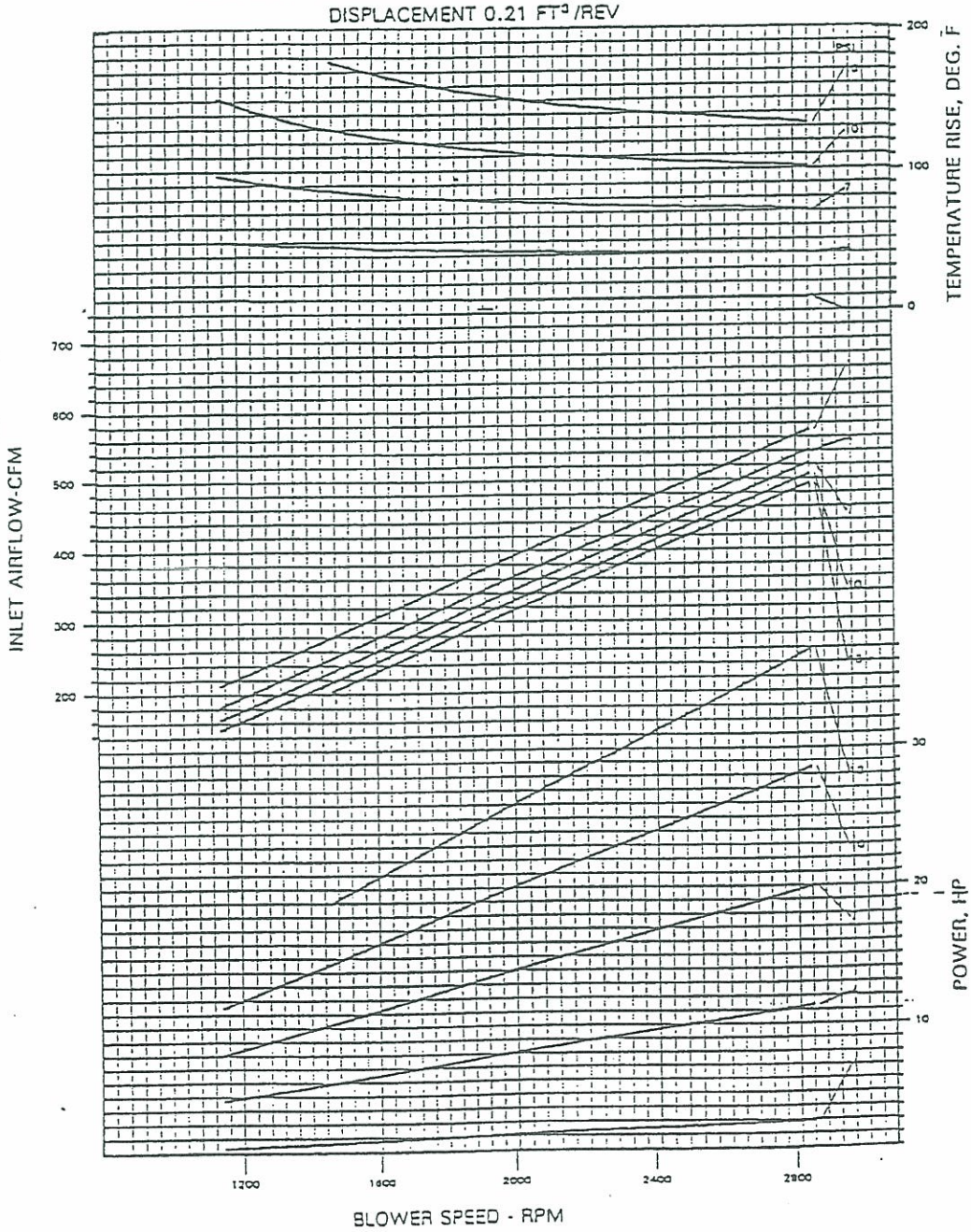

Form No. 04-9-19

COMPILED BY R.E. Haslam	APP'D BY E. A. Martin	SUPERSEDES N86-23 3/86	REVISED N88-12 3/88

Note:
Dimension C, P & O are approximate and may vary with Mfr.

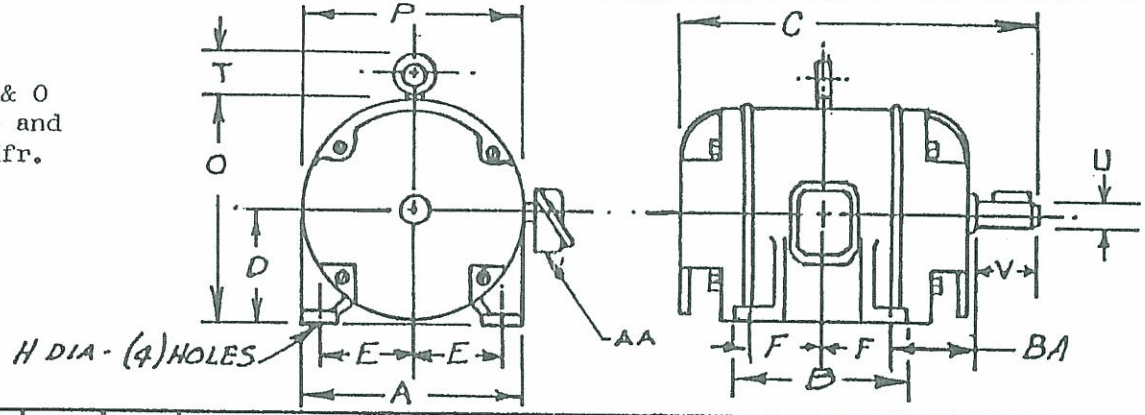

S&L PART NO.	FRAME No.	WT. (LBS)	H.P.	KEYWAY- WDTH	KEYWAY- DPTH	KEYWAY- LGTH	A	B	C	D	E	F	H	O	P	U	V	BA	AA
							DIMENSIONS IN INCHES												
7L102A	143T	40	1	3/16	3/32	1 3/8	7	6	12 3/4	3 1/2	2 3/4	2	11/32	6 3/4	6 7/8	7/8	2	2 1/4	3/4
7L102B	145T	45	1 1/2	3/16	3/32	1 3/8	7	6	12 7/8	3 1/2	2 3/4	2 1/2	11/32	6 3/4	6 7/8	7/8	2	2 1/4	3/4
7L102C	145T	45	2	3/16	3/32	1 3/8	7	6	13 5/8	3 1/2	2 3/4	2 1/2	11/32	6 3/4	6 7/8	7/8	2	2 1/4	3/4
7L102D	182T	72	3	1/4	1/8	1 3/4	9	6 1/2	12 3/4	4 1/2	3 3/4	2 1/4	13/32	9 1/4	9 15/32	1 1/8	2 1/2	2 3/4	3/4
7L102E	184T	80	5	1/4	1/8	1 3/4	9	7 1/2	13 3/4	4 1/2	3 3/4	2 3/4	13/32	9 1/4	9 1/2	1 1/8	2 1/2	2 3/4	3/4
7L102F	213T	130	7 1/2	5/16	5/32	2 3/8	10 1/2	7 1/2	15 3/4	5 1/4	4 1/4	2 3/4	13/32	10 3/4	11	1 3/8	3 1/8	3 1/2	3/4
7L102G	215T	145	10	5/16	5/32	2 3/8	10 1/2	9	17 1/4	5 1/4	4 1/4	3 1/2	13/32	10 3/4	11	1 3/8	3 1/8	3 1/2	3/4
→ 7L102H	254T	220	15	3/8	3/16	2 7/8	12 1/2	10 3/4	20 1/2	6 1/4	5	4 1/8	17/32	12 7/8	13 1/8	1 5/8	3 3/4	4 1/4	1"
7L102J	256T	240	20	3/8	3/16	2 7/8	12 1/2	12 1/2	22 1/4	6 1/4	5	5	17/32	12 7/8	13 1/8	1 5/8	3 3/4	4 1/4	1"
7L102K	284T	330	25	1/2	1/4	3 1/4	14	12 1/2	23 3/8	7	5 1/2	4 3/4	17/32	14 3/8	14 5/8	1 7/8	4 3/8	4 3/4	1 1/4
7L102L	286T	370	30	1/2	1/4	3 1/4	14	14	24 7/8	7	5 1/2	5 1/2	17/32	14 5/16	14 5/8	1 7/8	4 3/8	4 3/4	1 1/4
7L102M	324T	480	40	1/2	1/4	3 7/8	16	13 1/4	26 1/2	8	6 1/4	5 1/4	11/16	16 1/4	16 1/2	2 1/8	5	5 1/4	1 1/2
7L102N	326T	530	50	1/2	1/4	3 7/8	16	14 3/4	27 5/8	8	6 1/4	6	11/16	16 1/4	16 1/2	2 1/8	5	5 1/4	1 1/2
7L102P	364T		60	5/8	5/16	4 1/4	17 3/4	14 1/2	28 11/16	9	7	5 5/8	21/32	18 3/4	19 1/2	2 3/8	5 7/8	5 7/8	2

Note: - For 208 Volt Motors, Add Suffix "A" to above part numbers.

SMITH & LOVELESS ENGINEERING STANDARDS & SPECIFICATIONS

TITLE MOTORS - 3 Phase, 60 Hertz, 1800 RPM, One Winding, One Speed, 208 or 230/460 Volt, Horizontal Drip-Proof, Ball Bearing Squirrel Cage Service Factor 1.15

DATA PROCESSING DESCRIPTION

MOTORS, 3 PH HOR.

SYMBOL 7L102

SHEET 1 OF 1

UNIT OF MEAS. EA

Project: Marana, AZ -- IQ 52289
Project Manager: Andy McCullough
Date: 14-Jan-00

FACTORY- BUILT ADDIGEST DESIGN 50,000 GALLONS

	Average	Maximum
INPUT DATA:		
FLOW (MGD)	0.05	0.05
BOD (mg/L)	68	150
BOD LOAD (Lb/D)	28.36	62.55
TKN (mg/L)	48	48
TKN LOAD (Lb/D)	20.02	20.02
H_2S, (mg/L)	0.00	0.00
H_2S LOAD, (Lb/D)	0.00	0.00
O2 DEMAND(Lb O2/Lb BOD)	1.5	1.5
BOD O2 (Lb/D)	42.53	93.83
TKN O2 (Lb/D)	92.07	92.07
H_2S O2, (Lb/D)	0.00	0.00
WASTE O2 (Lb/D) or AOR	134.61	185.90
ALPHA	0.8	0.8
BETA	0.9	0.9
ELEVATION (ft)	2000	2000
ELEVATION CORR	0.94	0.94
TEMPERATURE (C)	25	25
CS @ TEMP (mg/L)	8.263	8.263
MIN. O2 AERATION	2	2
TEMP CORR	1.126	1.126
PEAKING FACTOR	1	1
STR (Lb O2/D)	271.98	375.61
STR (Lb O2/Hr)	11.33	15.65
DIFFUSER DESIGN		
DIFFUSER SUBMERGENCE	9.5	9.5
O2 TRANS EFF	0.07	0.07
SCFM	153	212
AERATN VOL (GAL)	34,782	34,782
AERATN VOL (FT3)	4,650	4,650
AERATN INTENSITY, (scfm/kcf)	33	46
Minimum Mixing Aeration, scfm	93	93
Blower Required for Aerat., scfm	153	212

SWD, ft	10.5
Plant Flow, gpd	50,000
Plant BOD, mg/l	68
Clarifier Calculations:	
If Hopper Type, 1 or Circular, 2	1
Clarifier Diameter or width for hopper type, ft	12.0
Hopper Type Length, ft	12
Clarifier Area, sf	142
Clarifier Overflow Rate, gpd/sf	352
S&L Clarifier Model No.	HC-144
Equalization Tank Calculations:	
Hydraulic Retention Time, hrs	0
Volume, cf	0
Equalization Mixing Rate, scfm/1,000 cu ft	20
Aeration Requirements for Equalization, scfm	0
Aeration Tank Calculations:	
Aeration Tank #1 Volume, cf	4,650
Aeration Tank #2 Volume, cu	0
Total Aeration Tank Volume, cf	4,650
Aeratin Tank Volumetric Loading, lb/d BOD/1000 cf	6
Aeration Tank Steady State Air Requirements, scfm	153
Aeration Tank Peak Air Requirements, scfm	212
Percent Air to Aeration Tank #1	1.00
Percent Air to Aeration Tank #2	0.00
MLSS, mg/l	3,500
Anoxic 1 Calculations:	
Anoxic HRT, hrs	4
Anoxic Tank volume, cf	1,114
Type Mixing Used	Mech Mixer
MLSS Recycle Ratio	9.1
MLSS Recycle (direct recycle), gpm	317
Anoxic 2 Calculations:	
Anoxic HRT, hrs	
Anoxic Tank volume, cf	0
Type Mixing Used	Mechanical
Post Aeration Calculations	
Retention Time, HRT, hrs	
Tank volume, cf	0
Air Required, scfm/kcf	30
Total Air Required, scfm	0

Chlorination Calculations:	
HRT, hrs	1.36
Volume, cf	379
Type Mixing Used	Air
Mixing Rate, scfm/1000 cf	20
Air Neeed for Mixing	8
De-Chlorination Calculations:	
Post Aeration HRT, hrs	
Aeration Tank volume, cf	0
Mixing Used, scfm/kcf	20
Air Needed for Mixing, scfm	0
Digester Calculations:	
Sludge Produced or WAS, lb/d	50
Sludge Concentration in Digester, %	1.0
Digester HRT, days	10
Digester Volume, cf	801
Digester Mixing Rate, scfm/1000 cf	30
Digester Air Requirements for Mixing, scfm	16
WAS/RAS Air Lift Pump Calculations:	
Maximum Desired Recycle Flow, gpm (150 % Des Flo	52
Minimum Desired Recycle Flow, gpm (30% Des Flow)	10
Air Lift Pump Air Requirements, scfm	10
Air Lift Pump Diameter, inches	4
Direct Recycle Airlift, inches	8
Direct Recycle Airlift, scfm	65
Blower Capacity Needed for EQ, scfm	0
Blower Capacity Needed for SS, scfm	252
Max Blower Capacity w/o Denti, scfm	310

BLOWER CALCULATIONS

Marana, AZ -- 52289
Andy McCullough

1/10/2000

1. HORSEPOWER CALCULATED BASED ON AIR REQUIREMENTS OF BLOWER

IDENTIFICATION	SCFM	T* DEG F	(460+T)/528	ELEVATION FT	P_1 SITE PRES	$(14.7)/P_1$	CFM
S&L Plant Design	305	110	1.08	2000	13.7	1.08	354

* Site air temperature

IDENTIFICATION	MOTOR EFF. %	BLOWER SCFM	Ta SITE TEMP DEG F	460 + Ta	P_1 SITE PRES PSI	DIFFUSER WATER DEPTH FT	P_2 BLOWER DIS PRES PSI	(R*0.283)-1 [R=(P1+P2)/P1]	TOTAL BLOWER bHP
S&L Plant Design	60	305	110	570	13.7	9.5	5.61	0.1022	13

[ ] = ENTER VALUES IN SHADED AREA TO CALCULATE HORSEPOWER

0.07	O2 Trans Eff
1.8	lb O2/bhp-hr

Blower Needed	15 nHP
Blower Outlet Temp	168 Deg F

Blower Outlet Temperature	
Inlet P	13.7 psi
Outlet P	5.61 psig
Site Temp	110 Deg F
r =	1.410539234
X =	0.102239583
F2 =	168 Deg F

$r = 1 + \frac{\text{discharge pressure above amb pressure}}{\text{barametric pressure at elevation}}$

$X = r^{0.283} - 1$

$F2 = (1+X)*(460+F1) - 460$

Centrifugal Compressor Engineering by Hoffman Air & Filtration Systems

uations for Blower Horsepower (*Compressed Air Data*, Ingersol Rand, 5th Ed, NY p23)

HP (actual consumed) = $[1.542*P_1*CFM*(R^{0.238} - 1.00)]/(100*E)$

P_1 = Site barometric pressure, psi

cfm = air rate into blower at P_1 and site air temperature.

E = Blower efficienccy, assumed to be 60%, including volumétric, mechanical and electrical efficiency (actual range calculated at 52 to 72%).

$R = (P_1 + P_2)/P_1$

P_2 = Blower discharge pressure, psig

Ta = site air temperature, deg F

$CFM = scfm*[(460+T)/528]*(14.7/P_1)$

$HP = (0.0429/E)*SCFM*(460=Ta)*(R^{0.283} - 1.00)$

Blower Pressure = water depth * 0.433 psi/ft + 0.5 psi inlet + 0.5 psi oriface loss + 0.5 psi piping loss

Air volume = std O2 lb/hr * hr/60 min * cu ft/0.0073 * 1/(Trans efficiency)

NITRIFICATION AND DENITRIFICATION CALCULATIONS

Project: Marana, AZ
Location:
For: Andy McCullough

1. Calculations for Direct Recycle

Inf TKN, mg/l total nitrogen (does not include NO3)	48			
Inf NO3, mg/l as nitrogen	0			
Design Effluent NO3, mg/l	5			34.7 gpm
Raw Waste Flow (Q), gpd	50,000			17.4 gpm
Return Activated Sludge Flow Ratio (RAS/Q)	0.5	0.025 mgd	or	316.0 gpm
Direct Recycle of MLSS Flow Ratio (DR/Q)	9.10	0.454999 mgd	or	
Raw Waste BOD, mg/l	150			
Safety Factor + Peaking Factor	3			
Extended Low Temperature of Wastewater	15			
Minimum SRT, days	9	Curve from equations in Nitrogen Manual. -- See Sheet 2		

2. Oxygen Requirements

Oxygen Required for Nitrification		4.6 g O2/g NH4-N	
TKN Load, lb/d		20	
Nitrogen Required for Synthesis, lb/d		3	Nitrogen needed for synthesis based on BOD to N Ratio of 100:5
Oxygen Required for Nitrification, lb/d AOR		78	
H2S Load, mg/l		0	
H2S Load, lb/d		0	
Oxygen Required for H2S, lb/d (1.88 X H2S)		0	
BOD of Raw Waste, mg/l		150	
BOD Load, lb/d		63	
Oxygen Required for BOD, lb/d AOR	1.5	94	
Total Oxygen for bioactivity, lb/d AOR		172	

NITRIFICATION AND DENITRIFICATION CALCULATIONS

3. Alkalinity Requirements for Nitrification		
Unit Alkalinity Destroyed, g/g	7.1	g CaCO3/g NH4-N
Total Alkalinity Destroyed by Nitrification, lb/d	120	Subtact nitrogen used in cell synthesis.
Alkalinity In Influent, mg/l	500	
Alkalinity In Influent, lb/d	209	
Alkalinity Remaining/Short (negative), lb/d, mg/l	89	212 mg/l Alkalinity Left
Alkalinity Desired in Effluent, mg/l	80	200 mg/l Total Alkalinity Needed for Nitrification
4. Denitirification -- Oxygen & Alkalinity Recovered		
Unit Alkalinity Recovery Factor	3.57	lb Recovered/lb NO3 Reduced
Alkalinity Available from Denitrification + Inf, lb/d	149	lb/d Includes Nitrates in the influent waste flow
Alkaliniitiy Needed, as Sodium Bicarbonate	0	lb/d as $NaHCO_3$
Unit Oxygen Recovery Factor	2.86	lb O2/lb NO3 Reduced
Oxygen Recovered, lb/d AOR	51	2.86*(TKN+Inf NO3-Eff NO3)
5. Total Oxygen Required		
Total Oxygen Needed - Oxygen Recovered, lb/d AOR	120	lb/d
Total Oxygen Needed - Oxygen Recovered, lb/hr SOR	9	lb/hr
OTE Efficiency, %	0.09	
Blower for Biological, scfm	99	scfm
6. Sludge Produced from Nitrification		
Cell Mass Production Factor	0.1	g VSS/g NH4-N
Sludge Produced from Nitrification, lb/d	3	lb/d TSS (Assume 80% Volatile)
Sludge Produced from Bio Treatment, lb/d	249	
Total Sludge Produced	252	

NITRIFICATION AND DENIT, ,CATION CALCULATIONS

7. BOD Required for Denitirfication

Concentration of Nitrate including Influent NO3	43 mg/l	Must use up all the NO3.
Amount of Nitrate including Influent NO3	18 lb/d	1 lb NO3 will provide 2.86 lb O2 when reduced to N2
		1 lb BOD requires 1.5 lb O2.
		Thus from an oxygen equivalent view 1 lb BOD is satisfied by 1.5/2.86 = 0.52 lb NO3; or 1 lb NO3 will satisfy 1.9 lb BOD.

8. BOD Needed to Use All NO3 Leaving A Fixed Amount in The Effluent

BOD Required to use all NO3, lb/d	34 lb/d		
Concentration of BOD Required to nitrify all N, mg/l	82 mg/l		
BOD Required/N Ratio if no excess BOD	1.70		
Concentration of BOD in Raw Wastewater, mg/l	150 mg/l		
Inf BOD/N Ratio	3.13		
BOD to be left in the effluent following nitrificaiton, mg/l	10		
BOD Req. - Raw Waste BOD + DNit Eff BOD, mg/l	0 mg/l	or	0 lb/d
Methanol Required to make up DNit Eff BOD, lb/d	0 lb/d		
Methanol Required, T/d	0.00 T/d		

9. BOD Needed to Have a BOD/N Ratio of 3.5 in Denitrification Tank

Total Conc of BOD Required to have a BOD/N ratio of 3.5	168 mg/l	or		70 lb/d
Total BOD Requried to have a BOD/N ratio of 3.5, lb/d	70 lb/d			
BOD Need to Add for a BOD/N ratio of 3.5, mg/l	18 mg/l	or		8 lb/d
Methanol Need to add for BOD/N ratio of 3.5, lb/d	8 lb/d		0.9 lb BOD/lb Methanol	
Methanol Required, T/d	0.00 T/d			
DNit Effluent BOD if Inf BOD/N ratio is 3.5, mg/l	86 mg/l			

Alkalinity Needed, as Sodium Bicarbonate	0 lb/d
Methanol needed to use all NO3 in Waste	0 lb/d
will leave a DNit Eff BOD of:	0 mg/l
and provide a BOD/N ratio of:	0.00
Methanol needed for ideal Denitirificaiton:	8 lb/d
will leave an DNit Eff BOD of:	0 mg/l
and provide a BOD/N ratio of:	3.5 or greater

SAMPLE ONLY – (Final copy to be submitted and approved by Design Engineer)

DESIGN SUMMARY
SMITH & LOVELESS MODULAR FAST®
12AD50-HC142 SEWAGE TREATMENT UNIT FOR
MARANA, AZ
JANUARY 18, 2000

The proposed equipment was sized to provide the effluent quality as given in Table 1, based on the influent characteristics as given in Table II, and proper operating conditions as stated in Table III. This sizing is only applicable if the system is constructed according to Smith & Loveless' recommendations and operated properly from a mechanical and process standpoint, as defined in the operation and maintenance manual for this equipment including the items listed in paragraph two herein. This excludes a period of two months from the initial start-up to provide for the required bacterial acclimation.

In addition to the requirements given in the operation and maintenance manual, proper operation and maintenance of the system includes influent and effluent monitoring of the BOD, TSS, and TKN, temperature, dissolved oxygen, sludge wasting, and pH control of the treatment system.

The Smith & Loveless treatment plant will be sized for an average monthly effluent quality as noted in Table 1 and based on the influent characteristics as set out in Table II.

TABLE I – 30 Day Average Effluent Characteristics

BOD_5:	20 mg/l
TSS:	20 mg/l
TN:	<10 mg/l

Total nitrogen limits are based on a minimum of 1 mg/l organic nitrogen and 1 mg/l of ammonia nitrogen.

The effluent limits in Table 1 are based on an influent to the treatment system having the characteristics given in Table II.

TABLE II – 24 Hour Composite Influent Characteristics to the FAST® Treatment System

Total Flow:	50,000 GPD Average Daily Flow
BOD_5:	150 mg/l maximum
TSS:	200 mg/l maximum
TN:	48 mg/l maximum
NH_3-N:	38 mg/l maximum
pH:	6.5 to 9 mg/l maximum

The effluent limits in Table 1 will be achieved only if the operation of the treatment system is as stated in Table III.

TABLE III - Operational Parameters

Units:	One – 12AD50-HC142 Sewage Treatment Unit
Total Flow:	50,000 GPD Average Daily Flow
Denitrification:	Recycle to the anoxic zone required at rates as given in the operation and maintenance manual.
Dissolved Oxygen:	2.0 mg/l minimum in the aeration basin.
Nutrient Requirement:	BOD:N:P; 100:5:1 minimum
pH:	6.5 to 9.0 mg/l
Wastewater Temperature:	15° - 25°C, Occasional lows of 10°C for a maximum duration of two weeks are acceptable once a nitrifying population is established. If the water temperature is expected to remain below 15°C for extended periods, insulation of the tanks and piping should be considered to maintain nitrification during winter months.
Toxins:	Heavy metals, such as Cd, Cu, Ni, Pb and Zn, phenolic compounds, cyanide, and halogenated compounds can inhibit nitrification reactions. Any inhibitor elements or compounds must not be present for this process to operate as designed.

FACTORY BUILT ADDIGEST For 50,000 GALLONS / DAY

Project: Marana, AZ -- IQ 52289

Project Manager: Andy McCullough

67.1 ft Long

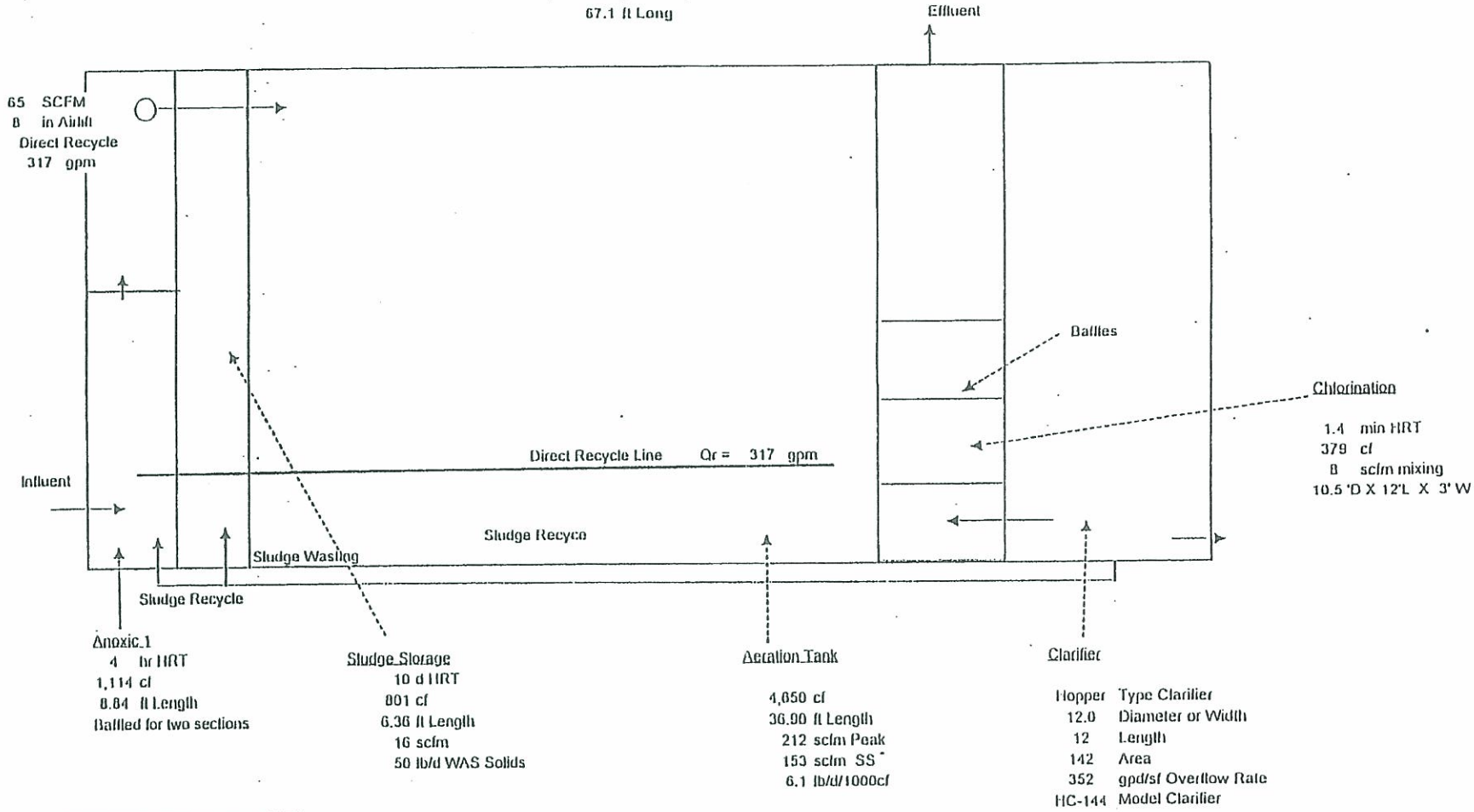

REQUIRED BLOWER	
310	scfm Maximum
252	scfm Steady State with denitrification

NOT TO SCALE

ENGINEERING DATA

Smith & Loveless, Inc.

14040 W. Santa Fe Trail Dr.
Lenexa, Kansas 66215

Factory-Built Addigest®
Treatment Plants
Outline Drawings
Page 1
May, 1988

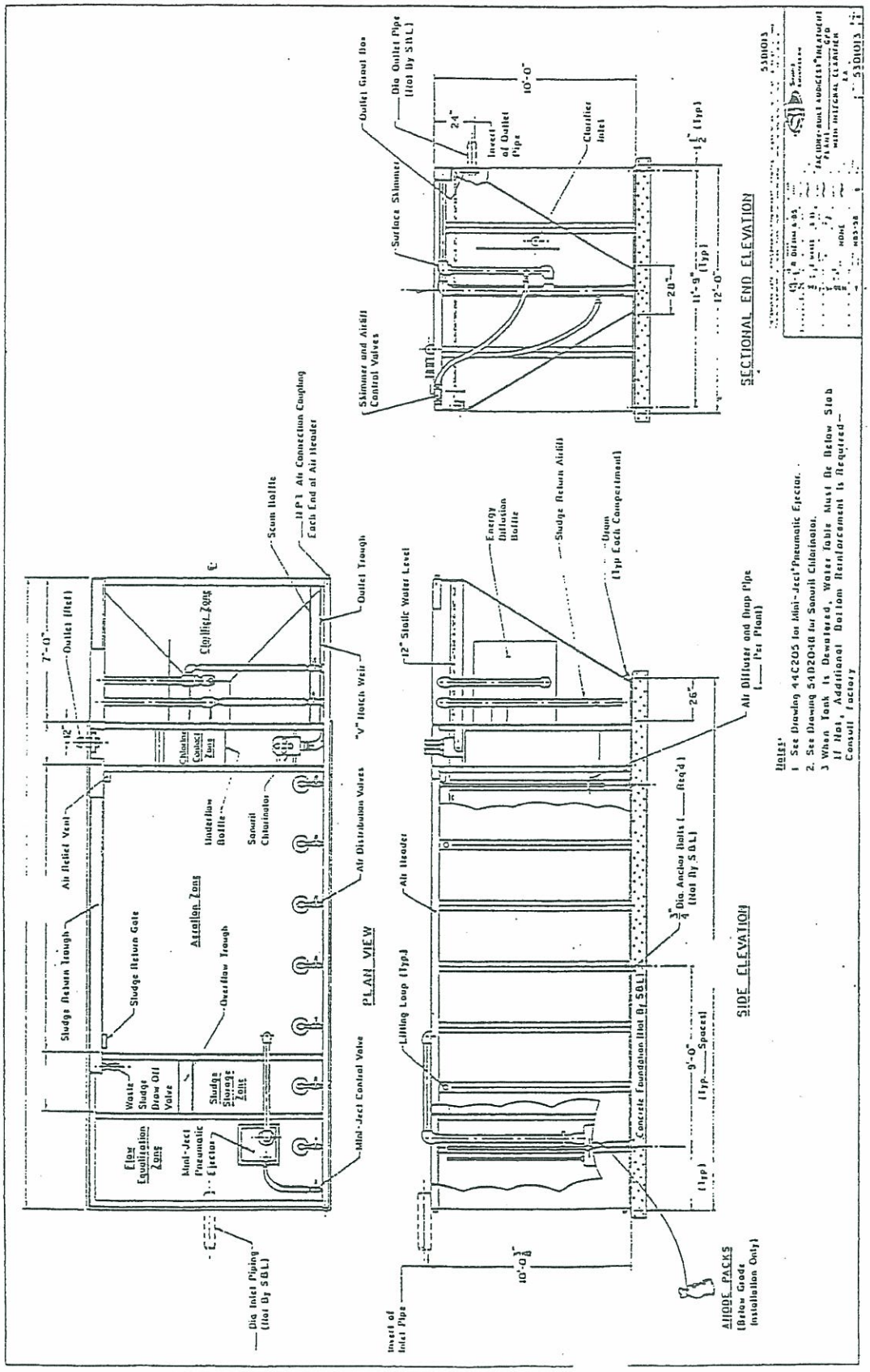

Factory-Built Addigest®
Treatment Plants
Outline Drawings
Page 2
May, 1988

ENGINEERING DATA

Smith & Loveless, Inc.
14040 W. Santa Fe Trail Dr.
Lenexa, Kansas 66215

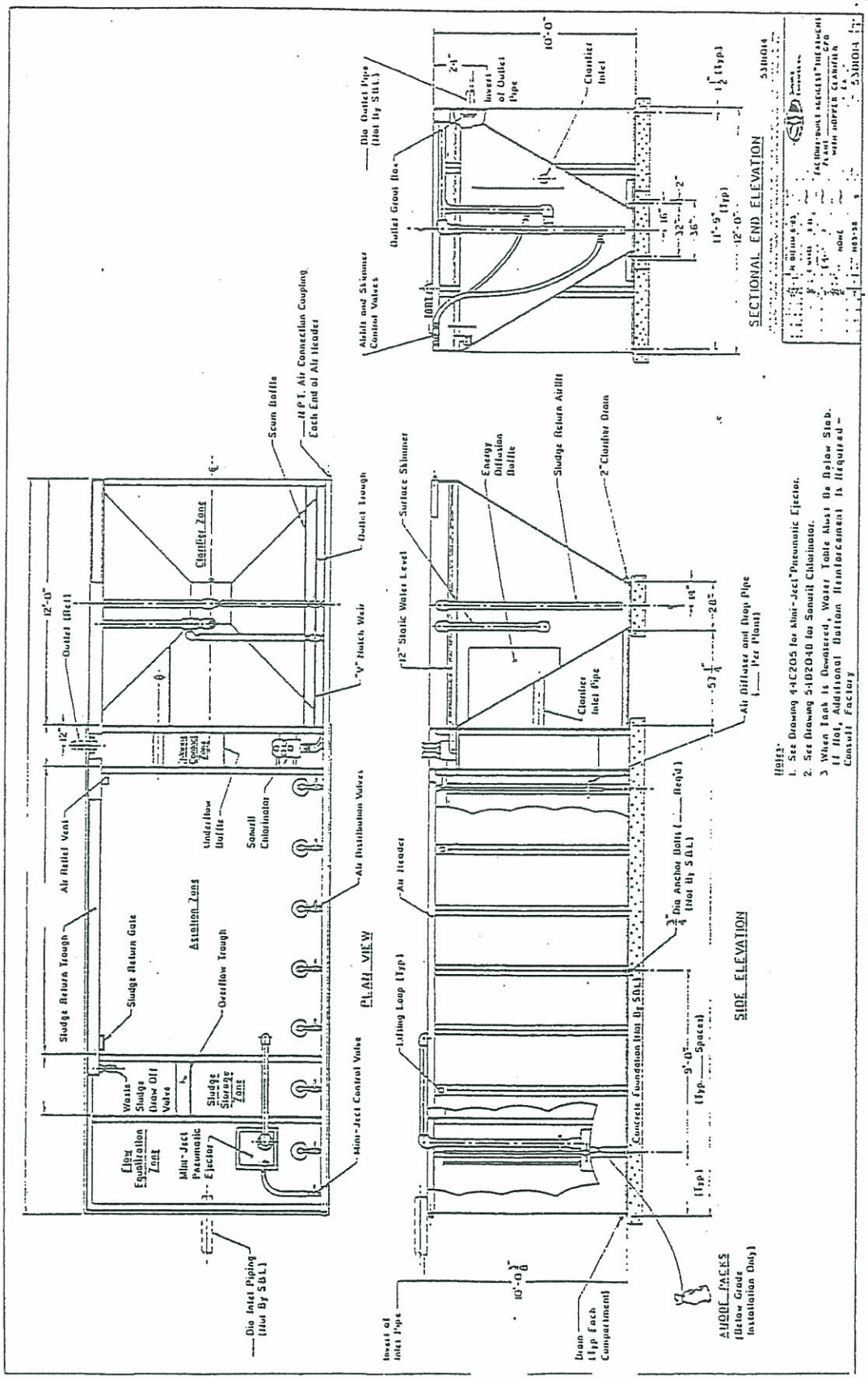

Smith & Loveless, Inc.

Fax Transmittal

OCT 24 2000

ɹ4ʊ Santa Fe Trail Drive
ıexa, Kansas 66215-1284, USA

Phone: (913) 888-5201
Fax: (913) 888-6503

ate: October 24, 2000	Fax: (520) 740-0135
o: Frank Luis	From: Chris Berger
ompany: Pima Co.	
ocation:	Total Pages Including This Page: 1

ıbject: Marana, AZ
S&L S/N 37-00186-P, 37-00187-P

e above-referenced plants are designed to handle 150 mg/l of BOD_5 at 50,000 GPD, per plant. The limiting ctor in treating the BOD is the size of the blowers. The organic loading concentration can be higher, as long as ɜ total organic loading does not exceed 62 lbs./day of BOD_5. If the loading exceeds this amount, then the plant ll not treat the waste as thoroughly.

ıe hydraulic limiting factor is the clarifier. At higher flows, the retention time would decrease allowing the ssibility of some solids exiting the system.

:his is unclear, or additional information is needed, feel free to contact me at ext. 499.

.. ..gards,

ıris Berger
·oject Engineer Treatment Systems

3:js

:: William J. Grant/Manager, AE Treatment Systems
Chris Simko/Stantec – FAX (602) 431-9562
Dennis Gamache/WEECO – FAX (480) 759-1548