CHAPTER 2

Regulatory and Customer Requirements

Chapter 2 - Regulatory and Customer Requirements

2.1 Introduction

Regulatory agencies and customers requirements set the level of design and treatment for wastewater treatment facilities. Regulatory agencies influence wastewater treatment facility design by setting requirements on the degree of redundancy, flexibility, security and reliability integrated into wastewater treatment facility design. The level of treatment is governed by major legislation, such as the federal Clean Water and Clean Air Acts, State of Arizona environmental quality standards, as well as specific quality demands of local customers. PCRWRD has its own set of wastewater treatment facility design requirements. Both the regulatory agencies and the customer have broad impacts on the level of treatment required and thus the type and layout of process systems, structures, and equipment needed to achieve it.

This chapter reviews current regulatory and customer requirements regarding wastewater treatment facility design and level of treatment as they relate to Pima County.

2.2 Wastewater Conveyance / Treatment

Many factors influence wastewater conveyance and treatment design including federal, state and customer requirements. Within various federal regulations are requirements for meeting system capacity, redundancy, reliability and security. Specific customer requirements influence system flexibility, aesthetics, operation and maintenance considerations and other aspects of design and future operations.

2.2.1 Conveyance System Capacity

In January 2001, the U.S. EPA approved draft regulation modifying the NPDES to include Sanitary Sewer Overflow (SSO) regulations. The proposed SSO regulations included a set of requirements for municipal wastewater collection systems, known as CMOM, for Capacity (C), Management (M), Operation (O), and Maintenance (M).

Although the federal rule was withdrawn in March 2004 from the Federal Register, the ADEQ implemented state CMOM rules on November 12, 2005. In accordance with the rule, if an owner or operator of a sewage collection system wants to be covered by the new 2.05 General Permit, the owner or operator must develop a CMOM Plan that addresses operation and maintenance, capacity improvements, and spill response. The Plan should quantify hydraulic deficiencies in the collection system, develop measures to assure capacity in light of deficiencies, and provide a rationale for prioritization and scheduling. The state rule (R18-9-C305, 2.05 General Permit: Capacity, Management, Operation, and Maintenance of a Sewage Collection System) requires specifically that the CMOM Plan identify "components of the sewage collection system that have insufficient capacity to convey, when properly maintained, the peak wet weather flow of a 10-year, 24-hour storm event. For those identified components, a capital improvement plan exists for achieving sufficient wet weather flow capacity within ten years of the effective date of permit coverage." Pima County Regional Wastewater Reclamation

Department (PCRWRD) obtained CMOM coverage under the 2.05 general permit on November 11, 2006.

PCRWRD's conveyance system (see **Figure 2-1**), including sewer lines, manholes, flow management structures and lift stations service the Pima County Metropolitan Area and the Cities of Tucson and South Tucson; the towns of Marana, Oro Valley and Sahuarita; and unincorporated communities such as Summerhaven (Mt. Lemmon), Arivaca Junction, Avra Valley, Green Valley, Corona de Tucson and Catalina as well as Pima County. Portions of the system date back to 1900.

Figure 2-1
Pima County Conveyance System

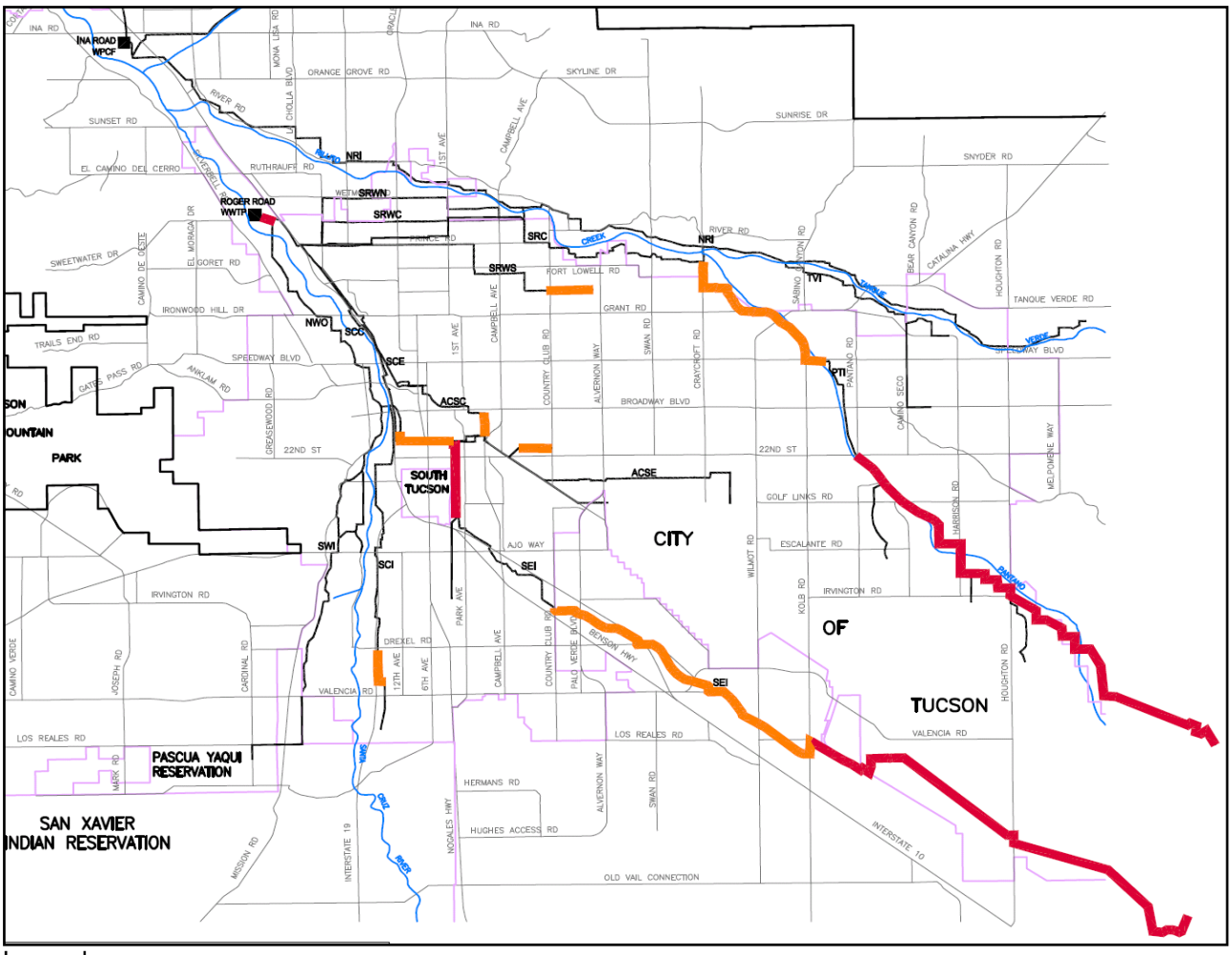

Legend:
- Exit Q Deficient (calculated basin exit flow is greater than 85% of full pipe capacity at the basin exit)
- Inlet Q Deficient (calculated basin inlet flow is greater than 85% of full pipe capacity somewhere within the basin)

Minimal capacity issues were identified in the 2006 Metropolitan Facility Plan Update [2.1]. This can be attributed to the conveyance system consisting of mature basins within the urban area (little or no projected population growth) and installation of interceptors with greater capacity than that needed to serve the current population. Tremendous growth is currently occurring outside of the urban area, in locations served by the (satellite) Non-Metro treatment facilities or basins on the extreme upstream reaches of the metropolitan conveyance system. The conveyance system is discussed in greater detail in Chapter 6.

2.2.2 Treatment System Capacity

The Metropolitan Area Wastewater Reclamation Facilities are the Roger Road WRF, Ina Road WRF, Randolph Park WRF. The other wastewater reclamation facilities are listed as Non-Metro treatment facilities.

Roger Road WRF is a 41-mgd trickling filter and activated sludge facility. The Roger Road WRF currently operates under an APP issued by ADEQ on May 26, 2005. The alert level for this facility is 40-mgd average monthly flow. Exceedance of the alert level for flow requires a response comparable to exceeding alert levels for pollutants with numeric Aquifer Water Quality Standards (AWQS).

Ina Road WRF consists of a 25-mgd high purity oxygen activated sludge facility and a new 12.5-mgd biological nutrient removal activated sludge train capable of nitrification/denitrification. The Ina Road WRF currently operates under an APP issued by ADEQ on July 14, 2006. The alert level for this facility is 35-mgd average monthly flow. Exceedance of the alert level for flow requires a response comparable to exceeding alert levels for pollutants with numeric AWQS.

State code (Arizona Administrative Code, or AAC, R18-9-A211, Permit Amendments) requires a significant permit amendment to the APP if an existing facility with a permitted design flow greater than 5 million gallons per day but less than or equal to 50 million gallons per day undergoes a physical change or change in its method of operation that results in an increase in design flow of four percent or more. Expansion at the Ina Road WRF will meet this criterion, and Best Available Demonstrated Control Technology (BADCT) rules for pathogen removal applies according to “the part of the facility that has not been required to conform to BADCT requirements for new facilities, if a facility or part of a facility has undergone or will undergo” any such change (AAC R-18-9-B206, Treatment Performance Requirements for Expansion of a Permitted Facility). The impact of BADCT requirements are discussed in more detail in Chapter 2.4.

The Non-Metro facilities consist of small capacity plants located throughout eastern Pima County, including Avra Valley WRF, Corona de Tucson WRF, Fairgrounds WRF, Green Valley WRF, Marana WRF, Rillito Vista WRF, Arivaca Junction WRF and Mt. Lemmon WRF. Population growth is of great concern at these facilities as treatment capacities currently range from less than 0.01 mgd to 4.1 mgd. The Non-Metro facilities are discussed in detail in Chapter 8.

2.3 System Condition Assessment

Existing condition assessments of the liquid and solid streams; unit processes; structural; electrical; instrumentation and control (I&C); heating, ventilation, air conditioning (HVAC)/plumbing; support facilities; and geotechnical aspects of the Roger Road WRF and Ina Road WRF are valuable in process and system developments. These conditions are presented in **Appendix B**. The evaluations aid in drawing conclusions regarding the suitability of the facilities to stay in service at existing, greater, or reduced capacity in the current treatment mode and in a converted nutrient removal mode.

2.3.1 Conveyance System

As described in the 2006 Metropolitan Facility Plan Update [2.1]: in 2003, PCRWRD commissioned an assessment of the collection system condition as part of their on-going asset management program to evaluate about 230 miles of trunk and interceptor sewers. This assessment was performed utilizing the National Association of Sewer Service Companies (NASSCO) condition codes ranging from "excellent" to "immediate attention required." The biggest areas of concern are segments of the collection system with unlined reinforced concrete pipe. While these segments only constitute 2 percent of the entire collection system, this pipe material is prone to failure in arid conditions with long wastewater travel times. Hydrogen sulfide gas causes significant corrosion of the concrete, which can result in piping structural failure. Segments of the collection system were rated as "poor" or "immediate attention required." The portions of the collection system with these ratings include portions of the Aviation Corridor, Canada del Oro, Old Nogales Highway, Pantano, Santa Cruz, South Rillito, Southwest and Tanque Verde Interceptors. Other segments included in the initial condition assessment were rated at a "fair" or "good" condition and were recommended for reevaluation in 2008. Additional rehabilitation/replacement needs identified for the conveyance system includes over 3,000 manholes; several siphon boxes and many of the lift station wet-wells, which exhibit signs of hydrogen sulfide corrosion.

2.3.2 Roger Road WRF

The Roger Road WRF is the older of the two major treatment facilities. The Roger Road WRF was first operated in 1951 and was expanded and upgraded in 1960, 1967 and 1979. **Figure 2-2** illustrates the process flow at this facility.

Figure 2-2
Roger Road WRF Process Flow Diagram

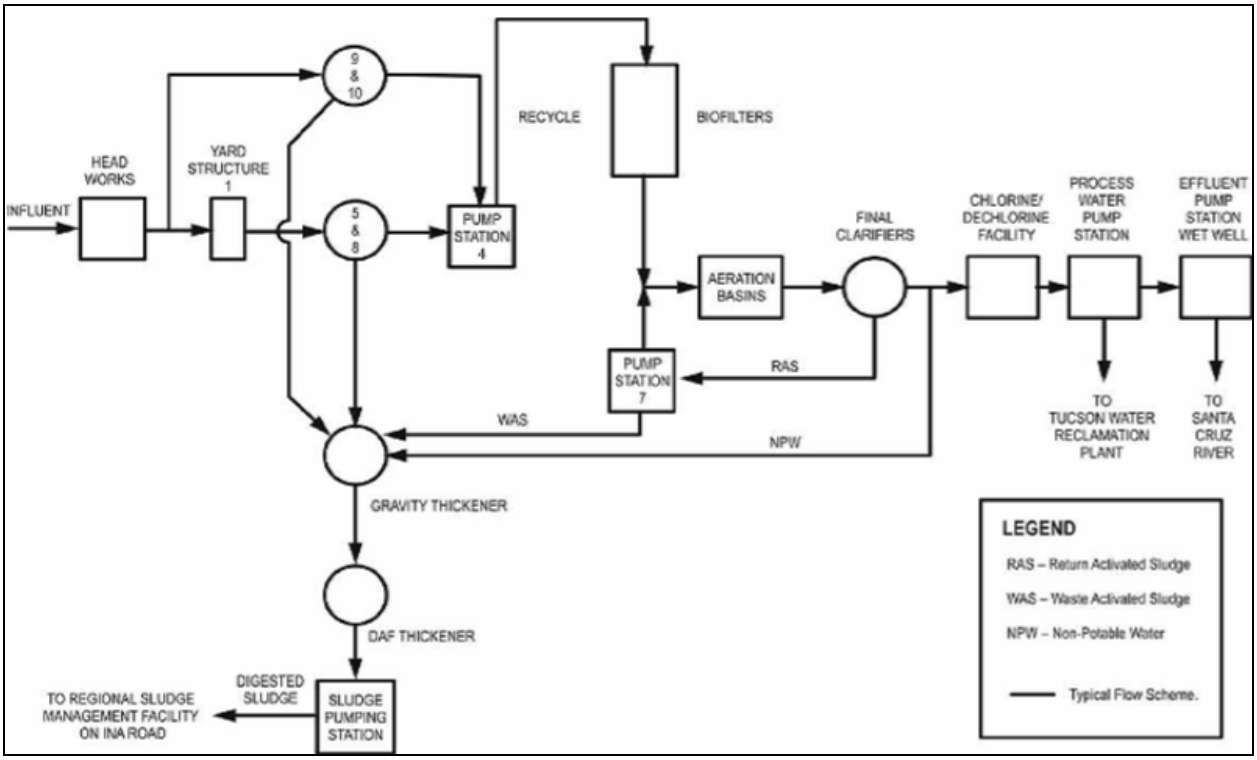

Wastewater treatment by-products include sludge, which is thickened and digested into beneficial biosolids. Digested biosolids are conveyed via force main to the Ina Road WRF and combined with digested biosolids from the Ina Road WRF; where it is thickened then hauled and applied to agricultural land as a soil amendment.

Until the late 1980s, the activated sludge tanks were used only during the winter months when the reaction rates slowed in the biofilters due to lower temperatures and higher influent loadings. As flow and influent loadings have increased at the facility, the activated sludge tanks have been placed into continuous service. The facility is required to continuously meet secondary treatment limits.

In general the facility is well maintained and in satisfactory condition with a few exceptions considering its age. The facilities, with continued good operations and maintenance practices, should provide satisfactory service for an additional 10 years or until new facilities are brought on line. Although, the electrical system is not serviceable for the long term without significant modifications and upgrades. Additionally, there is a significant lack of instrumentation and control. Programmable Logic Controllers (PLCs) and other Supervisor Control and Data Acquisition (SCADA) devices to permit remote monitoring or operation are not available.

A detailed evaluation of the Roger Road WRF: Structures, Equipment, Electrical and Civil are provided in Chapter 3.

2.3.3 Ina Road WRF

The original Ina Road WRF was designed and constructed from 1973 to 1977 with additional facilities designed in the late 1990's and placed into operation in 2006. The existing treatment plant includes a 25-mgd HPO Activated Sludge Process and a 12.5-mgd BNRAS process. Modifications to the original design to enhance equipment performance and reliability were completed in 1990. Average winter influent flow (peak season) is currently 23.8 mgd. **Figure 2-3** illustrates the process flow at this facility.

Figure 2-3
Ina Road WRF Process Flow Diagram

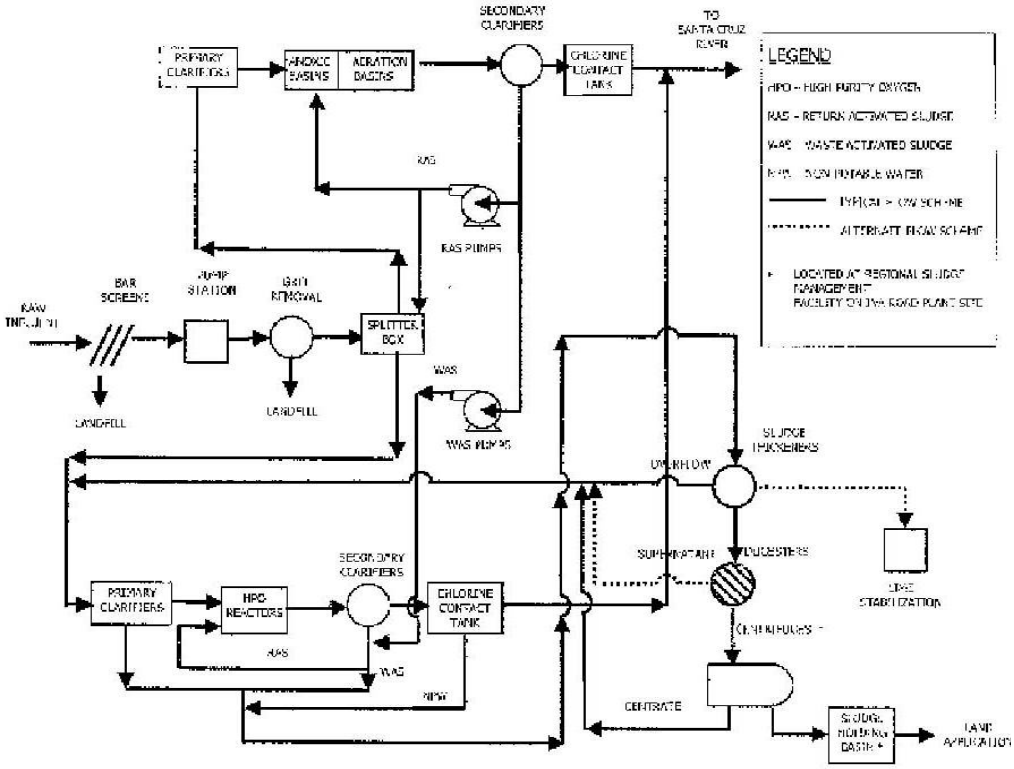

This facility is much newer than Roger Road WRF. This facility was generally rated in good condition. Concrete and mechanical equipment appeared to be in good condition throughout. The existing instrumentation and control system was rated as good, but appeared to be underutilized for a facility this size. An electrical motor control center requires some attention. Any wastewater facility must continually renew and replace components and systems to remain a viable operation. Additionally, any modifications need to consider back-up power provisions and existing/expanded need of laboratory facilities.

A detailed evaluation of the Ina Road WRF is provided in Chapter 3.

2.4 Effluent Quality

2.4.1 Permit Requirements

Regulatory objectives for effluent quality are currently established by each facility's AZPDES and APP permits. Limits in the AZPDES permits are driven by State Surface Water Quality Standards. Limits in the APP permits are driven by numeric State Aquifer Water Quality Standards and BADCT requirements.

The foremost goal is to meet permit requirements for elimination of ammonia toxicity and anticipated future total nitrogen limits at the Roger Road WRF and Ina Road WRF, determining the probable treatment approach at each site before the January 2007 submission of a Letter of Intent to the ADEQ. Specific Letters of Intent with capacity and wastewater treatment processes for the Roger Road WRF and Ina Road WRF were both issued on January 26, 2007, and can be found in **Appendix C**. In the future, the existing treatment system may require upgrades to meet more stringent regulatory criteria and the demand by customers for higher quality effluent and to reduce risk. Key factors in determining future treatment strategies include pathogen removal, salinity, contaminants of concern, future customer requirements, and risk associated with chlorine use.

In the absence of a specific permit numeric ammonia limitation, an estimated value calculated to avoid toxicity has been used to set the treatment objective for ammonia since the mid-1990s. The estimated value, under 2.0 milligrams per liter (mg/L) total ammonia-nitrogen, is based upon maintaining an effluent concentration of less than 0.02 mg/L un-ionized ammonia under worst-case conditions (i.e., measure of acidity and alkalinity (pH) of 7.2 and temperature of 32 degrees Celsius (°C)).

Regulatory permit requirements for Roger Road WRF, Ina Road WRF, Randolph Park WRF, and the Non-Metro facilities can be found in **Appendix D**,

2.4.2 Pathogen Removal

The AZPDES permits issued for the Roger Road WRF, Ina Road WRF, Randolph Park WRF, Avra Valley WRF, Green Valley WRF, and Mt. Lemmon WRF include *E. coli* limits of 126 CFU/100 milliliter (mL) (four of seven samples collected per week) and 576 CFU/100 mL (single-sample maximum). Arivaca Junction WRF, Corona de Tucson WRF, Pima County Fairgrounds WRF, and Rillito Vista WRF do not have AZPDES permits; the NPDES permit for Marana WRF includes microbial discharge limits that match those of its APP.

The APP permits for Roger Road WRF, Ina Road WRF, Randolph Park WRF, and Avra Valley WRF include fecal coliform discharge limits of non-detect in four of seven samples collected per week and 23 CFU fecal coliform/100 mL or 15 CFU *E. coli*/100 mL (single sample maximum). The APP permit for the Arivaca Junction WRF include fecal coliform discharge limits of 1000 CFU/100 mL (four of last seven samples collected) and 4000 CFU/100 mL (single sample maximum). The APP permits for the

Green Valley WRF and Marana WRF include fecal coliform discharge limits of 200 CFU/100 mL or most probable number (MPN) (four of seven samples collected per week) and 800 CFU/100 mL or MPN (single sample maximum).

Future expansions of the Roger Road WRF, Ina Road WRF and Non-Metro facilities may be subject to new facility BADCT requirements (refer to AAC R18-9-A211(B)(2)(b)), which apply to the following:

- Existing facilities discharging more than 5 mgd but less than or equal to 50 mgd that have undergone or will undergo a four percent increase in design flow
- Existing facilities discharging more than 0.5 mgd but less than or equal to 5 mgd that have undergone or will undergo a six percent increase in design flow
- Existing facilities discharging less than 0.5 mgd that have undergone or will undergo a ten percent increase in design flow

For facilities discharging greater than 0.25 mgd, the BADCT requirements (set forth in AAC R18-9-B204 through B206) include fecal coliform/*E. coli* limits of no organisms detected in four of seven samples collected per week and a single sample maximum concentration of 23 cfu/100 ml for fecal coliform or 15 cfu/100 ml for *E. coli* bacteria. An owner or operator may use unit treatment processes, such as chlorination-dechlorination, ultraviolet, and ozone to achieve the pathogen removal performance requirements. The facilities may also be able to use soil aquifer treatment (SAT) and an alternate point of compliance (POC) to meet the more stringent microbial standards. Use of SAT will require significant permitting discussions and approvals before acceptance by ADEQ.

2.4.3 Salinity

Salinity, as measured by total dissolved solids (TDS), is not directly regulated by permit but is a potential concern in meeting biomonitoring requirements and potential customer quality requirements. Indicator microorganisms used in biomonitoring are sensitive to TDS concentrations, and TDS at a concentration of 1100 mg/L have been identified as a cause of persistent effluent toxicity to *Ceriodaphnia*. End uses, including irrigation, cooling, and indirect reuse (via recharge and recovery), may ultimately require a reduction in effluent TDS levels.

TDS in wastewater originates from a number of sources, including the water supply, urban additions (for example, discharges from residential and commercial water softeners, residuals and brines from upstream water and wastewater treatment plants, and cooling tower blowdown), and farming additions. Several studies have recently been conducted or are in progress to characterize sources and impacts of salinity [2.2]:

- Central Arizona Salinity Study (CASS) – This four-year study, conducted by the Subregional Operating Group (SROG) in partnership with the Bureau of Reclamation, as well as other Arizona Cities (Tucson, Arizona), completed in 2005, evaluated the extent and nature of the salinity problem and recommended corrective actions.

- West Valley Brackish Groundwater Quantification Study – This study will identify the feasibility of supplementing current water supplies with desalinated brackish groundwater.

- City of Phoenix Cooling Tower TDS Study [2.3] – This study, undertaken by the City of Phoenix and completed in 2003, characterized the salt contribution of cooling towers to the 91st Avenue WWTP.
- The Reverse Osmosis/"Devaporation" Pilot Study – A cooperative effort between Arizona State University and the City of Phoenix, this study, being conducted at 23rd Avenue WWTP, is designed to accomplish nearly complete recovery of solids from membrane process reject streams.

- Phoenix Area Membrane Pilot Study – This study seeks to maximize production of reverse osmosis systems through increased recovery rates.

2.4.4 Contaminants of Concern

Emerging contaminants of concern include N-nitrosodiumdimethylamine (NDMA); pharmaceuticals, hormones, and other organic wastewater contaminants; and unregulated contaminant monitoring rule (UCMR)-listed pollutants.

NDMA is classified by EPA as a possible human carcinogen, and the current AZPDES permits for the Roger Road WRF and Ina Road WRF require that it be monitored in the effluent. A potential byproduct of chlorine disinfection, its generation is apparently enhanced by the presence of chloramines in the wastewater [2.4]. Detection of NDMA in the effluent could drive changes in the disinfection process at the wastewater treatment facilities. The detection limit and resulting notification limit of this contaminant is very low; 20 nano-grams per liter (ng/L) in the state of California.

Pharmaceuticals, hormones, and other organic contaminants are not currently regulated by permit at the wastewater treatment facilities but are of growing concern nationwide. While requirements for photodegradation and biodegradation of pharmaceuticals have yet to be investigated, studies on emerging contaminants are receiving funds to begin testing ultraviolet and ozone effectiveness in reducing contaminant levels.

High levels of perchlorate can cause adverse health effects such as interference with thyroid function. As a result, it was added to the list of unregulated chemicals for which monitoring is required under the UCMR. Arizona's current advisory health based guidance level for perchlorate is set at 14 ppb. Another contaminant shown to have cancerous effects is Arsenic. The EPA has set the maximum contaminant level for arsenic at 10 ppb.

2.4.5 Future Customer Requirements

2.4.6 Risk

To reduce the risk associated with transporting and handling large volumes of gaseous chlorine, Pima County utilizes sodium hypochlorite which is safe to transport and effective for effluent disinfection.

2.5 Biosolids Quality

Sludge generated at the Roger Road WRF and Ina Road WRF meets federal requirements for Class B biosolids. CFR Title 40 Part 503 regulations list various methods and approaches to achieve a Class B or Class A biosolids. Common approaches to achieve the highest class are: thermophilic digestion, heat drying, adding lime and composting. An evaluation will compare existing biosolids practices with the 503 regulations listings. An evaluation of the future spatial equipment needs to achieve a Class A standard are included in this 25-year master plan study.

The most common method available through the Part 503 regulations to meet Class B requirements is to use a Process to Significantly Reduce Pathogens (PSRP). These include aerobic and anaerobic digestion and alkaline stabilization processes. The most common method available to meet Class A requirements is to use a Process to Further Reduce Pathogens (PFRP). These processes include composting, heat drying, certain digestion processes, and certain alkaline stabilization processes. EPA further defines "Exceptional Quality" biosolids as products that are treated by a Class A process and have a relatively lower concentration of heavy metals. In addition to accepted PFRP and PSRP processes, the regulations allow demonstration of other treatment methods that are equivalent in pathogen and vector reduction.

Decisions to be made include when to implement Class A treatment and which process to select.

2.6 Air Quality

This chapter discusses the impact of air quality regulations, summarize the current status of the WRF's source classification and discuss the impact of potential project developments resulting from this study.

The Roger Road WRF and Ina Road WRF are currently subject to the air quality regulations of the Pima County Department of Environmental Quality and the EPA. Facility upgrades may trigger permit modifications and require extensive emissions modeling for the wastewater treatment processes. Additional emission controls and lean burn technologies will likely be required for new engines to comply within limits and BACT/MACT. Permit modifications may also be required if additional HAP standards are promulgated by EPA. Costs of re-permitting the power generation facilities may cost in excess of $100,000. This will be included in the costs to upgrade/expand or rehabilitate the existing power systems.

Roger Road WRF is currently categorized as a synthetic minor source for NO_X, CO, and other criteria pollutants. Ina Road WRF is currently categorized as a major source for NO_X and CO and a minor source for other criteria pollutants.

Roger Road WRF and Ina Road WRF have almost identical air quality operating permits regarding odor control. Within the air quality operating permits are regulations involving both emissions from diesel generators and odor/hydrogen sulfide emissions at the facilities. The air quality operating permit (#1913) for Roger Road WRF was issued on February 23, 2005 and expires on February 22, 2010. The air quality operating permit (#1903) for Ina Road WRF was issued on September 12, 2005 and expires September 11, 2010.

The following summarizes the requirements of *Part A: General Provisions* and *Part B: Specific Conditions* of both facilities' Air Quality Operating Permits regarding odor control issues.

> *Part A Sub-Section II, A.1. states that the Permittee shall install, operate and maintain air pollution control equipment or use good modern practices to minimize gaseous or odorous materials from being emitted in such quantities or concentrations as to cause air pollution. This is listed as a federally enforceable condition.*
>
> *Part A.3. states that no person shall allow hydrogen sulfide to be emitted from any location in such manner and amount that the concentrations of such emissions into the ambient air at any occupied place beyond the premises on which the source is located exceeds 0.030 PPM by volume for any averaging period of 30 minutes or more. For Ina Road WRF, the permit states this requirement is a locally enforceable condition. For Roger Road* WRF*, there is no statement on enforcement.*

Setback areas are required for each of the treatment plants for odor and noise control. The *Arizona Administrative Code's Title 18, Chapter 9, Part B: BADCT for Sewage Treatment Facilities* section discusses general considerations and prohibitions regarding setback requirements for facilities undergoing new construction and major modifications. New facilities or facilities undergoing major modifications must abide by the *A.A.C. Title 18 Chapter 9 Part B* setback requirements.[1, 2] These requirements include providing 1,000-foot setbacks for facilities with No Odor Control and 350-foot setbacks for facilities with Full Odor Controls.[3] The Code also states that operation of sewage treatment facilities shall not cause emission of offensive odors on a persistent basis beyond the setback requirements. Land area for the setback requirements will be included at each of the wastewater treatment plants.

2.7 Redundancy, Flexibility, and Reliability

Redundancy, flexibility, and reliability are significant factors in the successful day-to-day operation of any wastewater treatment facility. Redundancy and flexibility provide processing reserve when units must be taken out of service, and reliability sustains performance under unusual operating and environmental conditions.

Redundancy is provided by multiple process units and support equipment in each system. As a facility is expanded, redundant units and equipment should be added as appropriate.

Flexibility is provided by designing a plant piping system that allows redistribution of flows when a treatment train is out of service.

---

[1] Setbacks are measured from the treatment and disposal components within the sewage treatment facility to the nearest property line of an adjacent dwelling, workplace, or private property.
[2] Arizona Administrative Code Title 18 Chapter 9 Part B: R18-9-B201. General Considerations and Prohibitions.
[3] Full Odor Control means all odor-production components of the sewage treatment facility are fully enclosed and odor scrubbers or other odor-control devices are installed on all vents.

Reliability is provided by use of high-quality, rugged equipment, stocking of spare equipment and parts, and access to an alternate source of electric power. ADEQ currently requires that all WRFs provide, at a minimum, adequate dual power supply to maintain primary treatment and disinfection. In the future, it is possible that the State may extend its requirement for adequate power supply to include secondary treatment. In the process of site development, area will be reserved to locate the substations, generators, and duct banks necessary to provide backup power for secondary treatment, including effluent disinfection.

2.8 Environmental Habitat Considerations for the Santa Cruz River

Reduced discharge from Roger Road WRF may have an impact on the Santa Cruz River riparian habitats. Potential riparian impacts were derived from the Arid West Water Quality Research Project's "Habitat Characterization Study Final Report" [2.5] and other sources such as the recent Corps of Engineer (Tres Rios del Norte) studies of the Santa Cruz River.

Both the Roger Road WRF and Ina Road WRF discharge into the Santa Cruz River. The Santa Cruz River originates as a small southerly flow in the San Rafael Valley, flows down into Mexico, and then north into the United States. Historically, the Santa Cruz was a perennial stream until it reached Tubac, where it went subsurface. The main sources of flow in the Santa Cruz watershed are precipitation, groundwater discharge, irrigation return flow, and treated sewage effluent.

The majority of the river and tributary streams are intermittent or ephemeral. Flows in the Santa Cruz River below the Roger Road WRF result from the discharge of effluent and any storm waters that are discharged to the riverbed. From the Rillito area downstream to the its confluence with the Gila River, the Santa Cruz River is ephemeral, and only once every 10 to 20 years does sufficient storm flow occur to allow the Santa Cruz River to flow to the Gila River.

Mean monthly stream flow above the Roger Road WRF outfall ranges from 0 cubic feet per second (cfs) (May) to 94 cfs (August) and mean monthly stream flow below the Ina Road WRF ranges from 15 cfs (May) (plant effluent) to 128 cfs (August). The estimated average annual precipitation in the region is 12.4 inches.

Since the 1950s, the Santa Cruz channel has undergone severe sediment degradation in Tucson, while downstream reaches have experienced a period of aggradation. Gradual arroyo cutting over the past century has produced a channel that is now up to 33 feet below the historical floodplain. Effluent discharge has caused increased channel roughness due to vegetation and increased incision in the low-flow channel. Storm scouring can occur up to depths of 26 to 33 feet. Furthermore, uncontrolled vegetative growth slows downstream velocities which effectively reduces capacity and increases flooding potential during rainfall events with shorter reoccurrence frequencies.

Riparian habitat data were collected at five sites on the Santa Cruz River near Tucson. Site 1, upstream of the Roger Road WRF outfall, is ephemeral and did not contain any flow on May 2, 2000. Perennial vegetation at Site 1 is dominated by riparian vegetation that is typical of large, ephemeral drainages in southern Arizona. The perennial, woody vegetation at Site 1 consists of burrowweed (*Hymonoclea salsola*), desert broom (*Baccharis sarothroides*), and scattered individuals of desert willow (*Chilopsis*

linearis) and Mexican palo verde (*Parkinsonia aculeata*). Understory species are a mix of woody shrubs and herbaceous species including burroweed (*Haplopappus tenuisectus*) and cocklebur (*Xanthium stumarium*) and a variety of annual and perennial grasses and forbs. Conversely, riparian habitats at Sites 2 through 5, all of which were influenced by effluent flows, are variously dominated by willow (*Salix gooddingii*), mesquite (*Prosopis velutina*), and salt cedar (*Tamarix chinensis*) or combinations thereof. Individuals of blue palo verde (*Cercidium floridum*), cottonwood (*Populus fremontii*) and tree tobacco (*Nicotiana glauca*) are also present. Understory species include small individuals of the dominant species along with catclaw acacia (*Acacia greggii*), wolfberry (*Lycium* sp.), desert hackberry (*Celtus pallida*), and others. At Sites 3 and 4 (Ina and Cortaro Roads) emergent vegetation in the form of cattail (*Typha dominingensis*), Bulrush (*Scirpus* sp.), and smartweed (*Polygonum* sp.), and others form a very lush aspect of the vegetation.

Mammals, or sign thereof, observed along the Santa Cruz River at Tucson included raccoon (*Procyon lotor*), coyote (*Canis latrans*), pocket gopher (*Thomomys* sp.), and round-tailed ground squirrel (*Spermophilus tereticaudis*). Birds included four species of ducks, white-faced ibis (*Plegadis chihi*), black-necked stilt (*Himantopus mexicanus*), and several species of shorebirds, songbirds, and raptors. Observations of reptiles included individuals of western whiptail (*Cnemidophorus trigris*), sideblotched lizard (*Uta stansburiana*), and tree lizard (*Urosaurus ornatus*). No amphibians were observed along the Tucson reach of the Santa Cruz River.

The effect on aquatic communities of anthropogenic attempts to control the physical dynamics of these streams cannot be overstated. NPDES permit effluent limitations, based on water quality standards, traditionally form the basis for protection of aquatic life in all waters, regardless of the waterbody type (e.g., coldwater or effluent-dependent). A regulatory dilemma arises when one considers what level of water quality is needed to protect the designated beneficial use. The water quality standards regulation and EPA guidance distinguish between an “existing use” and a “designated use” (i.e., a potential use). However, water quality criteria do not reflect that distinction. The same high level of water quality is deemed necessary to protect both. That is probably not true for effluent-dependent streams. In a naturally ephemeral stream that occasionally would be dry but for flow augmentation derived from perennial effluent discharges, all existing uses have arisen under ambient water quality conditions – conditions created by the discharge of effluent. Therefore, one can conclude that existing water quality fully protects existing uses. However, it may be that better water quality would increase the richness and/or abundance of aquatic species in the effluent-dependent stream. Therefore, it is also possible to conclude that all of the potential beneficial uses are not fully supported by existing ambient discharge quality.

Regardless of discharge quality, the aquatic habitat supported by those effluent dependent flows will be materially reduced if discharge is reduced. Thus, where water quality was the factor precluding full attainment of the potential beneficial use, inadequate flows and insufficient habitat will severely reduce the maximum potential itself. All things being equal, better water quality may improve the biological productivity and diversity of a stream. But, all things are not equal. The conclusion that the aquatic population will benefit from improved water quality is premised on the static assumption that everything else (including volume of effluent discharged) will remain the same. The reduced capacity of treatment at the Roger Road WRF or increase in reclaimed usage or both will effectively reduce flow in the Santa Cruz River. This change alone will potentially change the riparian habitat. In addition, physical and

chemical factors associated with the creation of effluent-dependent waters also limit biological potential. Effluent-dependent waters and their associated riparian communities have significant potential to become an important habitat resource for aquatic and terrestrial species, including those species considered sensitive or listed as threatened and endangered.

According to information from the Pima County Regional Flood Control District regarding a recent Corps of Engineers Santa Cruz River Study, estimates of effluent flows to sustain the existing riparian habitat along the Santa Cruz River below the Roger Road WRF discharge range from 2 mgd up to 16 mgd.

2.9 Water Reuse Considerations

The average demand (year 2006) in the Tucson water reclaimed water distribution system is approximately 11 mgd. The future demands for reclaimed water are expected to significantly increase from the year 2006 averages. Peak demands are 2.3 times the average. Storage in the conveyance system is 15 million gallons plus storage at local golf course lakes. The system experiences both seasonal and daily demands. The peak seasonal demands are in June and July. The low demand is in the winter. Daily demands peak at night when wastewater flows at the plant are low, making system storage necessary. Additionally, there are several "pinch" points in the existing distribution system that limit the capacity of the pipelines to deliver flow. If a source is developed at Ina Road WRF, then there would be relief on the distribution system to the north of Roger Road WRF and enable the system to be more flexible in meeting the customer demands. If all treatment is provided at Ina Road WRF, there will need to be additional reclaimed water distribution piping to the south as the 24-inch line between Ina Road WRF and Roger Road WRF has a capacity of only 10 mgd.

Additional considerations include:

- Effluent from the Sweetwater pressure filter treatment plant is blended with the recovered water from the recharge basin to achieve the Class A reclaimed water rating.
- There is no regulatory requirement for a minimum volume of discharge to the Santa Cruz River at Roger Road WRF.

Based on these requirements, this subchapter will discuss the effluent flow and infrastructure needs required at the Roger Road WRF and/or the Ina Road WRF to accommodate the needs of the Tucson Reclaimed Water Treatment Plant (Tucson Water Reclaimed System), Pima County, the CEP, SAWRSA, and other reclaimed water owners.

2.9.1 Intergovernmental Agreements

As described in the 2006 Metropolitan Facility Plan Update [2.1]:

> *Four IGAs between Pima County and the City of Tucson governing their effluent ownership and distribution: the 1979 Intergovernmental Agreement (1979 IGA), the 2000 Supplemental Intergovernmental Agreement, (2000 IGA, which governs the Conservation Effluent Pool), and the 2003 Intergovernmental Wheeling Agreement (2003 Wheeling IGA). As the dates of these IGAs suggest, they were sequentially passed and each succeeding IGA builds upon the previously*

granted agreement. A fourth IGA, the Intergovernmental Agreement titled Permitting and Operating Managed In-Channel Recharge of Effluent in the Santa Cruz River Channel (2003 Managed Recharge IGA), governs the recharge of effluent allotted to the nine participants of the Lower Santa Cruz River Managed Recharge Project.

The 1979 Intergovernmental Agreement (IGA), signed on June 26, 1979, was the original agreement between PCRWRD and the City of Tucson. This agreement assigned control of wastewater conveyance and treatment activities to PCRWRD. In exchange, the City of Tucson would receive rights to the effluent produced at the PCRWRD Metropolitan Treatment Facilities, which were limited at that time to the Ina Road WRF, Roger Road WRF and Randolph Park WRF.

The SAWRSA was the settlement between the City of Tucson, Pima County and the United States Bureau of the Interior (on behalf of the water rights of the tribal nations in Pima County). The 2000 Supplemental Intergovernmental Agreement signed on February 8, 2000, placed restrictions on how PCRWRD could use the effluent from the Ina Road WRF and the Roger Road WRF. This agreement also identified the need for reopening the Randolph Park WRF, which had been shutdown in 1995. It provided an avenue for PCRWRD to deliver effluent to Pima County facilities. This supplemental agreement also established a Conservation Effluent Pool for use with riparian habitat projects and identified how the SAWRSA effluent water rights would be treated in determining effluent allocations. The 2000 IGA identifies up to 10,000 acre feet (AF) of effluent that will be set aside for use on environmental restoration projects. These projects will be in accordance with the criteria of the 2000 IGA, or must have the approval of both the City of Tucson and Pima County.

The 2003 Intergovernmental Wheeling Agreement, signed December 16, 2003, governs reclaimed water transactions between PCRWRD, the effluent provider; City of Tucson, the distributor and a reclaimed water user/owner; and other Pima County facilities, reclaimed water users. The effluent enters the system at the City of Tucson's Sweetwater Recharge Facilities and the Tucson Reclaimed Water Treatment Plant and through direct delivery from the Roger Road WRF; from there it is piped to various locations. The Randolph Park WRF discharges its effluent directly into the City of Tucson reclaimed water system. The agreement governs the costs (per acre-foot) that will be charged to Pima County for distribution of Pima County effluent to Pima County sites from either of these two locations.

The 2003 Managed Recharge IGA governs the recharge of effluent and the associated credits granted by Arizona Department of Water Resources (ADWR) for the Lower Santa Cruz River Managed (LSCRMRP) between the Ina Road WRF and Trico Road in Marana. Participants include the Town of Marana, Cortaro-Marana Irrigation District, Avra Valley Irrigation and Drainage District, Metropolitan Domestic Water Improvement District, Flowing Wells Irrigation District, Oro Valley, Pima County, City of Tucson, and the Bureau of Reclamation.

In accordance with the 1979 IGA, Tucson Water was awarded a majority percentage of all effluent after the SAWRSA distribution and Pima County was awarded a minority percentage. However, under the SAWRSA and separate IGAs between Tucson Water, Metropolitan Domestic Water Improvement District, and Oro Valley Water, a new distribution formula was created and also incorporated into the 2003 Managed Recharge IGA. In accordance with this new formula, of the total effluent generated from all Metropolitan and Non-Metropolitan Treatment Facilities, SAWRSA had rights to the first 28,200 AF,

and then the CEP had rights to up to 10,000 AF on an as-needed basis for environmental restoration projects. Since CEP is allotted after the United States receives its SAWRSA share and before either Tucson Water or PCRWRD receive their share, any allocation to CEP effectively reduces the remaining share available to Pima County and Tucson Water. As part of a settlement, Oro Valley and Metropolitan Domestic Water Improvement District provide a portion of Tucson Water's CEP share, and therefore they indirectly contribute to CEP. However, at the maximum CEP allocation, PCRWRD provides 1,000 AF, while Tucson Water and other providers are required to provide up to 9,000 AF.

Although a final agreement has not been reached between Tucson Water and Pima County as to how the CEP will be administered, it is currently anticipated that City of Tucson and Pima County CEP projects could reach the maximum CEP allotment of 10,000 AF of effluent by 2015. As not every restoration project will qualify or attempt to qualify for CEP, it is difficult to say with certainty the CEP allocation will be consumed as quickly as anticipated. It is possible that qualifying for CEP allocations could be a lengthy process involving the United States Fish and Wildlife Department. If the CEP effluent remains unused as an environmental water source, it could become very difficult for PCRWRD to predict its own long-term effluent balance.

2.9.2 Alternatives

To determine the optimal treatment alternative the following evaluation criteria are considered. Details of the alternatives are covered in Chapter 4

- Compatibility with Tucson Water reclaimed water distribution system
- Proximity of reclaimed water customers
- Use of existing infrastructure
- Volume of wastewater available at the site vs. potential reuse demand served by the site
- Effect on quantity of reclaimed water
  - Effect on Roger Road WRF and Ina Road WRF capacities
  - Effect on Santa Cruz River habitat
- Effect on overall system reliability
- Effect on overall system operability
- Impact on raw wastewater conveyance system
- Site availability
- Site compatibility with adjacent land uses
- Compatibility with ultimate injection of reclaimed water into potable groundwater supplies
- Probable capital cost impacts
- Probable O&M cost impacts

2.9.3 Underground Storage Recharge/Recovery Considerations

The benefits of underground storage and recovery include SAT, blending of reclaimed water with groundwater, cost-effective storage, and ability to recover water when needed. Recharge methods for

underground storage include infiltration in a stream channel (e.g., Santa Cruz River), infiltration in constructed basins, and injection wells.

For injection wells an effluent turbidity of 2 NTU or more will cause clogging over time, require periodic well maintenance and potential re-drilling of injection wells (especially for vadose zone injection wells) to keep viable. Further, the injection wells will require chlorination to prevent biological growths within the well. Lastly, injection wells are not permissible by regulation in the Tucson Aquifer Management Area.

Constructed recharge and recovery basins can get credit for recovery of up to 100 percent of the effluent for use. Managed recharge can at best get credit for recovery up to 50 percent of the effluent for use in the community. To maximize effluent water utilization in the community, direct use and recharge/recovery will need to be located adjacent to each other...

The existing Sweetwater Recharge and Recovery Facility meets a critical need to maximize effluent reuse by treating, storing and withdrawing plant effluent to meet peak demands of reclaimed water during the summer months.. It is a proven facility that is isolated from the potable water supply system because of favorable hydrogeologic conditions. When considering new storage and recovery facilities the following criteria should be met:

- Site of at least 40 to 50 acres
- Favorable hydrogeologic conditions
- Compatible with adjacent land and water uses

Conceptually, from a hydrogeologic perspective, underground storage facilities could be placed at Ina Road WRF if land is available and other concerns and issues are met satisfactorily. Managed recharge for annual or longer-term storage could be sustained and seasonal storage and recovery could be maintained. However, it is important to consider that underground storage effluent will impact groundwater levels and groundwater movement (affecting contaminant migration) in the local area.

Costs were estimated to create a SAT system with underground recharge and recovery features that is large enough to accommodate 32-mgd flow from the Roger Road WRF. The costs to construct the basins and the piping network to distribute effluent to the basins were well over $500 million in 2006 construction dollars. This far exceeds the costs of other forms of effluent treatment.

2.10 Cultural and Historic Preservation

Pima County has an active program to preserve historic and cultural resources. The County's objectives include:

- Protect cultural identity
- Preserve cultural and historic heritage
- Retain and maintains cultural diversity
- Save the past for the future

Currently, over 3541 archaeological sites have been identified while only 12 percent of eastern Pima County has been examined. This leaves a large amount to be surveyed that could unveil many more locations of cultural and historic heritage.

Construction or demolition activities resulting from the master planning effort may reveal uncatalogued burials or some other cultural identity area. If the location of construction or demolition is of archeological interest, a detailed survey of the area will need to be performed by State and local regulations early on to identify the potential for archeological discoveries.

Examination of the Roger Road WRF and Ina Road WRF parcels in Pima County's MapGuide identifies both Roger Road and Ina Road areas within highly sensitive archeological areas.

An extensive cultural resources overview for the Tres Rios del Norte Feasibility Study project, which covers the areas along the Santa Cruz River upstream of the Roger Road WRF to well below the Ina Road WRF, was performed in 2002 further supports the archeological sensitivity of the area.

As a testament to the archeological richness of the area, in April 2007 the Pima County Cultural Resources Department located 35 items of archaeological significance adjacent the eastern border of the Roger Road WRF, which substantiates the need for careful examination of the undisturbed areas along the Santa Cruz River for cultural resources. Mitigating measures are planned to clear or preserve the areas of new construction of archeological finds to permit construction of new facilities.

2.11 Regulatory Closure Requirements at Roger Road WRF

If the existing Roger Road WRF is to be decommissioned as an future action of the master plan, pursuant to Roger Road WRF's APP (#100655), closure requirements must be followed. These requirements include:

- Submit a written notice of closure to the Water Quality Compliance Section.
- Submit Detailed Closure Plan to the Water Quality Compliance Section meeting the requirements of A.R.S. 49-252 and A.A.C. R18-9-A209(B)(1)(a) (within 90 days of the notification of closure).
- Submit a written notice, with supporting documentation, indicating the approved Closure Plan has been implemented fully to the Water Quality Compliance Section (upon completion of closure activities).

To achieve clean closure, Post Closure requirements need to be followed. A Preliminary Phase I Environmental Site Assessment was performed for an area including the Roger Road WRF and the surrounding County-owned area in an effort to identify recognized environmental conditions (RECs) that could cause a delay in completing Clean Closure requirements for the property. The Preliminary Assessment identified potential issues of concern that may cause problems in achieving a Clean Closure for the area. For example, at Roger Road WRF asbestos removal will need to be considered prior to demolition work. Overall the issues of concern identified in the site assessment did not appear to pose serious problems to obtaining approval for a clean closure of a decommissioned Roger Road WRF. Upon successful completion of the closure activities, a letter of approval for closure will be issued by the ADEQ.

2.12 Community Involvement Program

The community involvement program activities consist of two public meetings and stakeholder interviews held during the course of the master plan development.

Early in the project the first pubic meeting addressed the scope and approach of the investigations and was designed to solicit concerns from the community. The second public meeting reviewed plan recommendations, along with results and actions for additional improvements to the County's wastewater operations. A brief summary of the Open Houses are provided below:

- ROMP Open House – October 17, 2006
  PCRWRD successfully held an open house for the general public on the project objectives and alternatives under consideration for the ROMP. The event was advertised widely. Citizens who attended the open house were encouraged to visit the different stations setup to address the different aspects of the project and ask team members project-specific questions. After the event comments and questions were collected by the project team for consideration in the planning activities. Local media representatives were present.

- ROMP Open House & Press Conference – May 21, 2007
  PCRWRD successfully held an open house and press conference, which was advertised for the general public to attend. Citizens who attended the open house were encouraged to visit the different stations describing the direction of the master planning efforts and ask team members project-specific questions. Local media representatives interviewed John Bernal, Deputy County Administrator, regarding ROMP details.

Individual interviews were conducted with various stakeholders at the beginning of the study to gather their views and input for evaluation during the study. Each interview varied from one-half hour to over one hour depending on the individual. Key questions asked in every interview were:

- What will success look like?
- What are the goals and needs?
- What needs to happen for success?
- What are the three most difficult/important issues that have to be worked through?
- What issues can be addressed with confidence; with no confidence?
- What has worked well; what hasn't?
- What additional topics need to be addressed in each of the workshops?

Results of these interviews are compiled and used as part of the evaluation of study alternatives. The interview results are presented in **Appendix E**.

2.13 Summary

In development of the master plan the requirements and needs of the PCRWRD stakeholders, including regulatory agencies, customers and the general public were extensively reviewed. The master plan results

meet the regulatory requirements and community needs as set forth and determined from the various stakeholder investigations. In the future, the existing treatment system may require upgrades to meet more stringent regulatory criteria and levels of redundancy, flexibility, and reliability; and the demand by customers for higher quality effluent and to reduce risk to the environment.

References

2.1 Brown and Caldwell, "2006 Metropolitan Area Facility Plan Update," February 2006

2.2 Gritzuk, Michael, City of Phoenix Water Services Department, "Planned Desalination Programs by the City of Phoenix," presented at the Bi-National Desalination Conference 2004, October 21, 2004

2.3 TNT Technology Company, *City of Phoenix Cooling Tower TDS Study*, WS90120017, February 2003

2.4 California Department of Health Services, "Studies on the Occurrence of NDMA in Drinking Water," March 15, 2002

2.5 Arid West Water Quality Research Project, "Habitat Characterization Study Final Report," December 2002

2.6 Sonoran Desert Conservation Plan